CHAPTER 34

SUBDIVISION CODE

ARTICLE I - GENERAL PROVISIONS

34-1-1 **PURPOSE.** This Code, herein referred to as the "Subdivision Code", or "Code", in accordance with State law and the City Comprehensive Plan and Official Map, regulates the subdivision and development of land lying within **one and one-half (1.5) miles** of the corporate limits of the City. Specific objectives of this Code are:

(A) to facilitate proper location of development and transportation within the City.

(B) to avoid overcrowding of population and congestion of vehicular traffic.

(C) to avoid legal and other problems by requiring proper monumentation and recording of land.

(D) to conserve and increase the value of land, improvements, and buildings in the City.

(E) to protect against injury or damage to residents caused by development.

(F) to facilitate functionality of City infrastructure.

34-1-2 **JURISDICTION.** This Code shall apply to all developments of land and construction of improvements upon land, whether a subdivision platting process is required or a traditional subdivision exists. This in effect extends to development on tracts previously subdivided and this Code, in conjunction with City Zoning Code shall govern the construction improvements on said tracts insofar as these impact the City and adjoining properties, as deemed such solely by the City. The term "development" is used throughout the Code to refer to not only subdivisions but also non-subdivision developments. For said developments that are not subdivisions, the City reserves the right to request, not limited to, topographical surveys, legal survey information, drainage calculations, improvement plans, fees, and permits similar to that required for subdivisions. All planning, engineering, surveying, permitting, fees, infrastructure costs, and all other costs required to effect requirements of this Code shall be paid by the developer of the subdivision or development unless noted otherwise. The City reserves the right to withhold approvals and permits in the event that the City determines that any subdivision or development is in violation of this Code. No Final Plat or other instrument of conveyance shall be considered valid until the provisions of this Code have been met, as determined solely by the City.

Subdivision plats shall be required in accordance with the State of Illinois Plat Act. Said Act refers to "subdivision plat", interpreted to be Final Plat, as defined herein. The Final Plat is the final instrument of the approval process for a subdivision or development as defined by this Code, the approval process being required to conform to this City Code.

A Final Plat and approval process will not be required for the following in accordance with said Act:

(A) The division or subdivision of land into parcels or tracts of **five (5) acres** or more in size which does not involve any new streets or easements of access;

(B) The division of lots or blocks of less than **one (1) acre** in any recorded subdivision which does not involve any new streets or easements of access;

(C) The sale or exchange of parcels of land between owners of adjoining and contiguous land;

(D) The conveyance of parcels of land or interests therein for use as a right of way for railroads or other public utility facilities and other pipe lines which does not involve any new streets or easements of access;

(E) The conveyance of land owned by a railroad or other public utility which does not involve any new streets or easements of access;

(F) The conveyance of land for highway or other public purposes or grants or conveyances relating to the dedication of land for public use or instruments relating to the vacation of land impressed with a public use;

(G) Conveyances made to correct descriptions in prior conveyances;

(H) The sale or exchange of parcels or tracts of land following the division into no more than **two (2)** parts of a particular parcel or tract of land existing on **July 17, 1959** and not involving any new streets or easements of access;

(I) The sale of a single lot of less than **five (5) acres** from a larger tract when a survey is made by an Illinois Registered Land Surveyor; provided, that this exemption shall not apply to the sale of any subsequent lots from the same larger tract of land, as determined by the dimensions and configuration of the larger tract on **October 1, 1973**, and provided also that this exemption does not invalidate any local requirements applicable to the subdivision of land.

In addition to the platting requirements above, the City reserves the right to require dedication of easements, rights-of-way, potable water systems, sanitary sewer systems, underground and surface drainage systems, and other features the City determines necessary to the public.

34-1-3 **INTERPRETATION.** This Code is intended to set forth minimum requirements and all provisions herein shall be construed liberally in favor of the City. When requirements of this Code differ from those of any State or Federal statute, City ordinance, easement, covenant, deed restriction, or other State, Federal, or Local Agency policy, including but not limited to those of Clinton County, said standards the City determines to be more restrictive shall govern.

Selected definitions are as follows. Definitions of items in referenced documents throughout this Code, and definitions provided by the context of Code associated with any particular item, are also in effect. These definitions set forth meaning, however, the City reserves the right to interpret said definitions to be benefit of the City:

ADA: Americans with Disabilities Act. Note that the City has adopted the document entitled "The Illinois Accessibility Code", by the Illinois Capital Development Board, as the

governing document for construction of public facilities, buildings or otherwise, within City jurisdiction.

ADT: Average daily traffic, measurement as defined by IDOT.

Area, Gross: All land area including, but not limited to, right-of-way and easement reservations within a tract of land being platted.

Area, Net: The Area, Gross, excepting areas reserved for public use.

Building (Dwelling): Any permanent structure intended for the support, enclosure, shelter, or protection of persons.

Building Permit: A permit issued by the City for the construction, erection, or alteration of a building.

City: The City enacting and enforcing this Code through the Mayor and City Council members. Includes all of the City's authorized agents and employees charged with interpretation and enforcement of this Code.

Conduits: For the purpose of this Code, these shall be buried drainage structures such as pipes, culverts, storm sewers, drains, etc., and bridges.

Culvert: Conduits with spans less than those prescribed for bridges by IDOT, generally open to ditches or other drainageways on both the upstream and downstream ends with no inlet structure around the upstream end such that inflow falls into the system at said point at a height greater than **one (1) foot** measured at the conduit face.

Dedicate: To set apart for special use and transfer ownership of a right-of-way, parcel of land, or improvement without monetary compensation. Generally refers to those transferred to the City via the Final Plat for subdivisions.

Design: Creation and conception of improvements on the land for a particular purpose, applying accepted practices and methodology either enforced by laws or policy, and those of the applicable profession.

Detention: Impeding surface runoff with no percolation into the soil (retention), generally equates to a volume or space that only periodically has runoff within it. For definition, existing or proposed lakes, that will have a quantity of storm rainfall contained in it for periods longer than typical storm events, will be considered retention areas (assuming some unquantifiable percolation) with said detention volume above a normal pool elevation.

Developer: An owner or agent of an owner of property undertaking improvements in the form of a subdivision or other development of land.

Development: A subdivision of, or improvements to, a tract of land.

Drainageway: An existing or proposed feature such as a depression, swale, ditch, creek, river, floodway, lake, or detention/retention outlet that conveys surface runoff. Generally not considered a conduit such as storm sewer piping or culvert.

Easement: A parcel of land dedicated by the owner of the land to a public or private entity for certain limited purposes.

Engineer: An Illinois Registered Professional Engineer.

Final Plat: A plat generated for the subdivision approval process. Generally the formal document that is recorded with the County allowing sale of property and reserving right-of-way, easements, and other boundaries.

First Floor: Inhabitable floor of a building, including walk out basements, usually described with an elevation, used to check conformance with National Flood Insurance Program compliance. Note that the first floor shall also mean the floor that can be accessed first with or without steps, upwards from the yard elevations nearest the street adjoining the home or business in defining sanitary sewer service requirements. The two definitions are not interchangeable.

IDNR: Illinois Department of Natural Resources.

IDOT: Illinois Department of Transportation.

IDS: Intersection or Interchange Design Study as defined by IDOT.

IEPA: Illinois Environmental Protection Agency.

IHPA: Illinois Historical Preservation Agency.

Improvement: Any building, pavement, grading, or other feature for use by a property owner, intended as a generally permanent feature to remain on the land.

Improvement Plans: Documents prepared by an Illinois Registered Professional Engineer and/or Structural Engineer in the case of a subdivision, for improvements; or those prepared by the same for improvements in a development other than a subdivision; intended to guide construction of said improvements. A formal submittal required in the subdivision approval process.

Inlet: A structure that accepts surface runoff, connected to some conduit system. Generally, interception of runoff occurs near the top of said structure and runoff falls into said structure rather than via any conduit extending from said structure or within said structure.

Jurisdictional: Proposed or existing feature regulated by a State, Federal, or other local agency. Typically used to describe drainageways. See also Municipal-Jurisdictional.

Longitudinal: Parallel to the direction vehicles travel.

Lot: A unit of a parcel of land created for improvements thereon.

Municipal-Jurisdictional: A jurisdictional feature regulated by the City via this Code and other ordinances. For drainage systems, drainageways and conduit systems draining **fifteen (15) acres** or more within or beyond the tract being developed.

Natural Water Surface: That occurring in an existing drainageway with existing drainage structures excluded.

Normal Pool: Water surface within a retention facility corresponding to the elevation of the spillway or other outlet structure. Said water surface cannot equate to that produced by any storm event being planned for.

NPDES: National Pollutant Discharge Elimination System.

Owner: A property owner.

Plat: A document depicting physical boundaries of land prepared by a registered Illinois Professional Land Surveyor.

Preliminary Plat: A plat generated for the subdivision approval process. Similar to a Final Plat with less information.

Record Documents: Drawings, in electronic format, equivalent to Improvement Plans and Final Plat drawings that are prepared by the developers engineer for submittal to the City. These detail specific, installed infrastructure and subdivision boundary features.

Retention: See detention.

Runoff: Also termed storm event surface discharges, or discharges. Refers to quantities of rainfall accumulated on the ground, building roof top, gutters, and pavement surfaces that do not infiltrate into the ground and that flow in some direction on the ground surface or into conduits or drainageways. For purposes of definition, it is assumed that all quantities generated in a **twenty-four (24) hour** period do not infiltrate into the ground.

SCS: Soil Conservation Service.

Sketch Plat: A plat generation for the subdivision approval process. Generally a document intended to facilitate planning between the developer and the City before the developer commits monies to subsequent steps in the subdivision approval process.

Sump Sewers: Underground conduits, owned and maintained by the City, used to convey water that has accumulated in a sump pit within a residential or commercial building and discharged from said sump pit by a sump pump via privately-owned conduits that are connected to the sump sewers.

Surveyor: A registered Illinois Professional Land Surveyor.

Transverse: Perpendicular to the direction vehicles travel.

USACoE: United States Army Corps of Engineers.

USGS: United States Geological Survey.

Utilities: Conduits, or other conveyance systems, delivering material or energy necessary for operation of residences and businesses and disposing of the same; and systems, not limited to conduits, accommodating surface water runoff and groundwater discharges. May be buried or not.

Referenced documents in this Code are hereby adopted as part of Code by said reference. It shall be construed that said referenced documents shall be the most current edition in effect at the time of initiation of review of Improvement Plans in the subdivision approval process or development review.

34-1-4 MUNICIPAL STANDARD DETAILS. Individual, standard drawings, herein entitled "Municipal Standard Details" and sometimes referred to as "Standard Details", provide minimum requirements in graphical form for planning, design, and construction. These Standard Details are considered minimum Code requirements. The City has adopted these in conjunction with this Code, as part of Code, to facilitate intent and to provide a means of revising said Standard Details periodically without a coincident revision of Code language as these are considered policies. Municipal Standard Details are not subject to expiration limitations of submittals except for lot and street layouts and street classifications such that when said details change, plans and other documents shall be revised accordingly regardless of the status of their review or approval.

34-1-5 FEATURES TO BE DEDICATED AND MAINTENANCE RESPONSIBILITIES. In addition to setting land apart for special use and transferral of its ownership to the City via the Final Plat and the Improvement Plans described in this Code, the City will also own water and sewer mains, sanitary sewers, lift stations, force

mains, pavements, sidewalks, driveway pavements, drainage structures, and all other infrastructure within and below the surface of said right-of-way and public easements, excepting the limits of responsibility by the landowners detailed within this Code, such as that for service connections. The landowners shall retain usual, periodic maintenance responsibilities for detention/retention areas including discharge structures, weed control within all easement areas including those above underground conduits, driveway pavement within right-of-way and easement, underground conduits beyond right-of-way and easement, and other features that may be governed by the City's Zoning Code. The City reserves the right to enter and access all public right-of-way and easement areas, so dedicated, at any time, to perform emergency maintenance and restoration, including grading work, as they deem necessary in the interest of the public.

34-1-6 **LIMITATION OF LIABILITY.** No elected official of the City, employee of the City, or other agent of the City shall render himself personally liable for any damage accrued to persons or property as a result of any act required or permitted in the discharge of his duties under this Code. Any suit brought against any of the same persons as a result of any act required or permitted in the discharge of his duties under this Code shall be defended by the City's attorney until the final determination of legal proceedings.

34-1-7 **AMENDMENTS.** This Code shall remain in effect indefinitely, until the City determines it shall be amended. All requests for amendments of Code shall be submitted in writing with the City Clerk. The City Clerk shall forward said amendments no later than **thirty (30) days** following receipt at City Hall to City Public Works personnel, all Planning Committee members, and all City Council members. The Planning Committee shall hold a public hearing on every amendment proposal received within **ninety (90) days** following receipt. The Committee shall give notice indicating the time, date, and location of the hearing and nature of the proposed amendment(s) not more than **thirty (30)** nor less than **fifteen (15) days** before said hearing by publication in a newspaper of general circulation within the City. Notice of the public hearing may be made in pamphlet form provided that such notice is authorized by the City Council. The pamphlet shall be available for inspection at City Hall and the City Library and shall be posted in at least **one (1)** other public location within the City. Following said public hearing, the Planning Committee shall submit an advisory report to the City Council no later than **thirty (30) days** following said hearing. The City Council shall act on the proposed amendment at their next meeting following receipt of said advisory report. Without additional public hearings, the City Council may either pass or reject the proposed amendment or may refer it back to the Planning Committee for further consideration.

34-1-8 **VARIANCES.** Interpretation of this Code and subsequent requests for changes to plats and plans on the part of the City, be it City Public Works personnel, their agents, the Planning Committee, or City Council does not constitute granting

variances. When interpretation is significantly different from Code such may be construed as ultra vires, without protection of tort immunities. Due to the nature of variances related to the types and requirements of submittals in the approval process, variance requests acknowledged and desired by the developer shall be described in writing and submitted with the initial Sketch Plat, Preliminary Plat, Improvement Plan, or Final Plat submittals. Variance requests shall be limited in their scope to that particular submittal being reviewed; e.g. a variance request for details of a wet well for a lift station design shall not be addressed at the Preliminary Plat submittal stage but at the Improvement Plan submittal stage. For each of the aforementioned, City Public Works personnel shall prepare their response as to their disposition towards said variance(s) request in their reviews. In the event that City Public Works personnel encounter an additional need for a variance(s) that was not brought to their attention by the developer, the city shall also mention these in their reviews. The same shall apply to Planning Committee reviews. Only the City Council shall be permitted to grant or disapprove variance(s). Disagreements as to whether variance(s) requests are indeed variances or simply interpretations shall be resoled only by the City Council after the appeals procedure is initiated by the developer - this procedure being noted in subsequent SUBMITTAL and REVIEW sections of this Code. The City Council shall not grant any subdivision feature variance(s) request without determining the following:

(A) The variance request(s) is consistent with the general purposes of this Code, and

(B) Previous, similar variance(s) were granted since adoption of this applicable Code, and

(C) The variance request(s) is the minimum deviation from Code requirements, and

(D) The circumstances engendering the variance request(s) are not applicable to other tract such that an amendment rather than a variance would be more appropriate, and

(E) The variance request(s) will not frustrate the implementation of the municipal Comprehensive Plan, including the Official Map.

ARTICLE II

SKETCH PLAT AND GENERAL PLANNING

34-2-1 DEFINITION AND PURPOSE. A Sketch Plat may be prepared and submitted to the City before a Preliminary Plat is prepared. The Sketch Plat is not required prior to the Preliminary Plat process. Approval of information presented on said Plat by the City Council will not be construed as approval of a Preliminary Plat. This submittal is intended to minimize costs incurred by the developer by clarifying interpretation of this Code before the developer proceeds with subsequent subdivision review. The Sketch Plat shall include the entire tract, or tracts, of desired immediate and future development.

34-2-2 PREPARATION. The developer shall review applicable Code, ordinances, zoning, Comprehensive Plan, and regulations. General development phasing, boundary, lot and street layout, street classification, drainage, water mains, sanitary sewer systems, utilities, and other facilities shall be contemplated as these will be discussed with City personnel. Special care shall be given to boundary, lot and street layout, and street classification as these shall remain unchanged from an approved Sketch Plat to a Preliminary Plat.

34-2-3 SKETCH PLAT REQUIREMENTS. The developer shall prepare, prior to discussion and review by City personnel, the following:

(A) Some form of tract boundary definition, with dimensions, e.g. assessor's map, deed, etc.

(B) Adjoining land use and lot boundaries sketched.

(C) General topography superimposed with the tract boundary (not requiring full topographic field survey) including, but not limited to, bodies of water, creek banks, and vegetation, e.g. USGS map, aerials, sketched contours, etc.

(D) Approximate location of existing water main, sanitary sewers, gas main, buried electric, storm sewers, and any other known utilities including easements, if these are known.

(E) Proposed street layout (right-of-way) and lot boundaries superimposed on the approximate boundary and topography. Streets should be described and their classification noted.

(F) Approximate location of proposed water main, sanitary sewers, storm sewers, and detention facilities.

34-2-4 SUBMITTAL AND REVIEW. The above information shall be submitted to the City, to be reviewed by the City's Public Works Department personnel. Following a period of **twenty-one (21) days** of review said personnel will provide the

developer, the Planning Committee, and the Mayor and City Council, with a written letter of comments. The developer will then have a period of **twenty-one (21) days** to respond in writing to comments by the City Public Works Department personnel, with a revised Sketch Plat, as required. The City Public Works Department personnel will then review again for a period of **twenty-one (21) days** and respond in writing to the same persons, either requesting changes or recommending approval by the Planning Committee.

In the event changes are required, the same period of **twenty-one (21) days** of response and review will continue until the City Public Works personnel are satisfied the Sketch Plat is adequate for submittal to the Planning Committee. In the event the developer wishes to appeal changes required by City Public Works personnel, the developer shall include in his response a written description of disagreement of enumerated feature or features and then submittals go directly to the Planning Committee.

The Planning Committee, upon receipt of the approved, or partially approved, Sketch Plat from the City Public Works personnel will have a maximum of **forty (40) days** from receipt to approve or disapprove the Sketch Plat. The developer may then proceed with revisions, if disapproved by the Planning Committee, and resubmit a written response and revisions in a period of **twenty-one (21) days.** The Planning Committee will then have another **forty (40) days** of review for approval or disapproval.

In the event changes are required, the same period of **twenty-one (21) days** and **forty (40) days** shall apply. If in the event the developer wishes to appeal changes required by the Planning Committee, the developer shall include in his response a written description of disagreement of enumerated feature or features and then submittals go directly to the City Council.

The City Council, upon receipt of the approved, or partially approved, Sketch Plat from the Planning Committee, will have **thirty (30) days** to approve the Sketch Plat. In the event the City Council does not approve the Sketch Plat, the developer will have **twenty-one (21) days** to resubmit to the City Public Works Department personnel and then the process described above starts over.

34-2-5 **GENERAL PLANNING AND DESIGN REQUIREMENTS.** This Section prescribes general requirements to be followed in laying out the subdivision or development and subsequent design and construction. More specific requirements for particular features are included in subsequent Articles and Sections.

(A) **Adjoining Right-of-Way and Access.** Subdivisions and developments adjoining State, Federal, or County right-of-way that can be accessed shall have reservation of a minimum of **sixty (60) feet** of right-of-way from centerline of any roads or highways within said agencies' right-of-way; e.g. a State highway that currently has **thirty-three (33) feet** of right-of-way on one side would have **twenty-seven (27) feet** of additional right-of-way reservation. Said reservation shall not be noted as "reservation for future right-of-way" but shall be shown as right-of-way on plats. It shall be in the name of the City or County as transfers to the State require additional efforts

that could be undertaken by the City or County at a later time. Any easements required shall be measured from said right-of-way reservation and not the previous boundary.

Entrance permits, drainage calculations, traffic studies, IDS's, Improvement Plans, and signal plans for proposed streets and drainage systems adjoining said agencies' right-of-way shall be submitted and approved by said agencies before the City will approve Improvement Plans.

The City reserves the right to limit the access points to existing streets as they deem necessary. Said access points desired along State, Federal, or County right-of-way shall be approved by the City prior to submission to the appropriate outside agency. The City will limit public street access to **one thousand (1,000) foot** intervals along streets with projected **twenty (20) year** ADT's greater than **two thousand (2,000) vehicles.**

(B) **Current and Planned City or State Projects.** Any subdivision and development impacted by current and planned City or State improvement projects shall be designed to accommodate said projects as determined by the City. Requirements for access of (A) above shall also apply.

(C) **Traffic.** The City reserves the right to require the developer prepare a traffic study, if not coincident with any required by IDOT or the County, following policies set forth in referenced IDOT publications and manuals and procedures deemed acceptable by the City so that the City can determine impacts of proposed subdivision or development to existing and proposed City street systems. Depending on the size of the subdivision or development, the limits of said study may extend an indefinite distance beyond the immediate area of the subdivision or development. Any required signalization and/or geometric upgrades shall be designed by the developer and design and construction costs of these shall be borne by the developer.

(D) **Existing Streets.** Existing streets, and roadway elements such as sidewalks, terminating at the boundary shall be continued through the subdivision and those on opposite sides of the boundary shall be connected. Where topography is conducive to extension of existing streets that are generally straight, the extension shall be generally straight and not curved. A determination of existing street classification will be made by the City and in the event that the proposed street widths and right-of-way prescribed by Code are larger than the existing, Code requirements shall govern and appropriate transitions made. Existing utilities paralleling said existing streets shall be continued accordingly.

Where existing streets abut the subdivision or development and terminate in a temporary turn around, or a cul-de-sac that is to be removed, the developer shall bear the costs of removing said features and extending said street.

In the event a boundary of a subdivision or development abuts an uncurbed or unimproved section of existing street (or road being annexed), said street shall be classified and the appropriate right-of-way will be reserved. The developer shall design drainage systems, curbing, and a minimum **eight (8) inch** thick aggregate base and bituminous surface treatment between new curbing and the existing pavement unless a higher type pavement exists in which case said pavement shall be matched utilizing pavements prescribed by the Municipal Standard Details. The profile of the curb shall be designed such that future improvements to the existing street with higher type pavement will be facilitated. Curb and drainage systems shall be installed on the development side

of the street only. The developer will bear all costs of said design and construction of said features adjacent to existing streets.

The profile developed for immediate construction of curb on one side associated with the development being proposed shall be designed to accommodate new curb and drainage on the opposite side of the street. Drainage systems to accommodate new curb and drainage on the opposite side of the street are not required to be installed with the immediate development, however, proposed designs for systems being built shall accommodate pavement drainage and existing runoff from an area extending from the back of curb of the opposite side of the street a distance away from said back of curb that is a minimum of **fifty (50) feet.** When larger areas than those described will be required to discharge into the same street drainage system, the City may opt to initiate upgrades to the systems being designed for the immediate development at costs borne by the City.

In the event that the existing street (or road being annexed) is accessed with proposed streets in a perpendicular fashion, i.e. an intersection, and there are existing streets or roads opposite the property being developed, proposed streets shall align with these streets or roads with no offsets as deemed necessary by the City.

In the event that the existing street (or road being annexed) is similarly accessed as noted in the previous paragraph, adequate intersection sight distance per IDOT references and guidelines shall be required. This may necessitate additional acquisition of right-of-way along the existing street to effect adequate grading of the existing street. When said grading is required, the entire existing street shall be reconstructed at the developer's expense with the required infrastructure noted previously on the improvement side and with design features on the opposite side that meet requirements noted herein.

(E) **General Street Layout Requirements.** The following requirements shall also be met when planning the street network:

(1) Generally, the proposed street system shall be a continuation of existing grid systems.

(2) The distance between streets, along any street with adjoining lots, shall be no greater than **one thousand two hundred (1,200) feet** and not less than **five hundred (500) feet,** thereby defining a block.

(3) The maximum distance along dead end streets shall be **five hundred (500) feet** from cross street's edge to back of cul-de-sac, and shall terminate in a circular open space having a radius at the edge of pavement (streetside edge of curb) of at least **forty-five (45) feet,** commonly referred to as a cul-de-sac. Right-of-way shall be centered with the pavement and shall be of a width comparable to that of the street itself such that sidewalk is within right-of-way.

(4) The right-of-way for streets to be terminated without a cul-de-sac shall extend to the boundary of the tract. The pavement in this area shall be completed to within **fifteen (15) feet** the end of the boundary as most street classifications will provide sufficient turn around area. This is to allow future

continuation of installed utilities, including sanitary sewer, with minimization of the potential for undermining pavement.

(5) Streets shall intersect at right angles with a minimum of **one hundred fifty (150) feet** of tangent alignment from the center of the right-of-way of the street being intersected.

(6) Proposed streets intersecting in a perpendicular fashion to existing streets shall be aligned with any existing streets perpendicular to existing streets on the opposite side.

(7) Sight lines at intersections shall be those prescribed by IDOT procedures.

(8) The minimum design speed for all streets shall be **thirty (30) mph**, unless the City deems higher speeds are required to guide design.

(9) Abrupt changes in horizontal alignment, or corners, and any knuckles adjoining said corners, shall be avoided wherever practical. When such corners are unavoidable, these shall be designed with minimum radii prescribed by IDOT design standards at the minimum **thirty (30) mph** design speed, or such that a bus and passenger car can pass each other without one or the other stopping or passing through parking areas, at a minimum of **ten (10) mph**.

(10) Knuckles shall be designed such that paved area drains away from the main street to curbing that shall be installed around the knuckle.

(11) Super-elevated sections of pavement will not be warranted, unless speeds are high, as prescribed by IDOT design standards.

(12) Cross slopes, the slope of pavement in its transverse direction, shall be those prescribed by the Municipal Standard Details.

(13) In intersections, no cross slope of any portion of the intersection shall exceed **four percent (4.0%)** or be less than **one-half percent (0.50%)**. The exception to this is when sidewalk is installed, or could be installed in the future, requiring a crosswalk across pavement, the area of said crosswalk shall be no greater than **two percent (2.0%)** cross slope transverse to the pedestrian direction of travel.

(14) Intersections shall be designed such that the more traveled (main) street's cross slopes are maintained as typical and the projection of these into the less traveled (minor) street shall define the less traveled street vertical alignment, or profile. In no circumstance shall the profile of the minor street project into cross slope of the major street. Where practical, the cross slope of the major street shall project a minimum of **one hundred fifty (150) feet** from the center of the right-

of-way of the major street before a vertical curve in the profile begins. In the event this is not practical, a small vertical curve shall be placed on the minor street with maximum algebraic differences not exceeding those of IDOT design policies.

(15) Intersections shall be located such that the low points of vertical alignments do not fall within the intersection wherever practical.

(16) All points of intersection (PI's) of vertical alignments shall have vertical curves.

(17) No portion of any vertical alignment for streets shall be greater than **ten percent (10%)** for all streets, or greater than **eight percent (8%)** for all types of collector streets.

(18) No portion of any vertical alignment for streets shall be less than **0.40%**, except at areas at the crest or sag of vertical curves. Curb grades shall be a minimum of **0.40%**.

(19) Alleys shall be prohibited in single family residence districts. Alleys may be required in multiple-family districts and in commercial/industrial districts unless other adequate provisions for service access are made. Alleys shall not intersect with other alleys nor have abrupt changes in horizontal alignment. Dead end alleys will not be allowed. Requirements herein will not apply for access roads to sanitary sewer lift stations and other sanitary sewer, water system, and utility facilities.

(20) The minimum radius of the edge of pavement at all intersections shall be **fifteen (15) feet**.

(21) The minimum radius of the edge of pavement at all intersections between new streets and existing, previously constructed City streets shall be **twenty-five (25) feet**.

(22) The minimum radius of the edge of pavement at all intersections for Major Collectors with any other type street shall be determined by use of turning templates or CADD methods such that buses in use in the City, turning in all directions, remain within the projected through lane without crossing into opposing lanes.

(23) The radius of the edge of pavement at intersections of Business, or Industrial Collectors with any other type street shall be determined by use of turning templates or CADD methods such that WB-50 truck vehicles, turning in all directions, remain within the projected through lane without crossing into opposing lanes.

(24) The City reserves the right to increase turning movement requirements for any street if they deem such is necessary.

(25) Streets shall be made to cross drainageways such as, but not limited to, ditches, creeks, rivers, and lakes, nearly perpendicular to said drainageways. Street alignments that parallel said drainageways are discouraged. Street alignments that parallel jurisdictional floodways such that longitudinal encroachments require fill placement in a floodway will not be allowed. The vertical alignments of all streets shall remain above jurisdictional base flood elevations.

(26) Access roads to sanitary sewer lift stations and other sanitary sewer and water system and utility facilities such as booster stations, shall be laid out and constructed as Alleys, per the Municipal Standard Details, including reservation of right-of-way, from streets. Storm sewer shall be constructed due to the presence of curbing. These shall be **three (3) feet** above the **one hundred (100) year** water surface occurring in the subdivision or development.

(27) At sanitary sewer lift stations, booster stations, pumping stations, and other facilities other than the distribution mains, larger paved areas will be required near the facility such that a single unit (SU) vehicle, or larger vehicle deemed necessary by the City, can turn, access the facility, and back out so as to exit the same direction as entry. All of this area shall be included in right-of-way or easement as directed herein. These also shall be **three (3) feet** above the **one hundred (100) year** water surface occurring in the subdivision or development.

(28) Major Collector streets shall be provided at approximately **one half (1/2) mile** intervals with the exact location to be determined by the City.

(F) **Sidewalks, Stop Conditions, Crosswalks and Signs.** Sidewalks are required on one side of all streets except Alleys, their entire length, per the Municipal Standard Details. Existing sidewalks on tracts abutting the proposed subdivision or development shall be extended through the subdivision. ADA sidewalk ramps and detectable warning areas shall be installed at all intersections and at the throat of all cul-de-sacs per the Municipal Standard Details and IDOT Highway Standards. The City reserves the right to review proposed stop sign and crosswalk locations and revise these as they deem necessary during the Improvement Plan approval process.

All signs, supports, and their installation, and pavement markings required for the new subdivision or development, within it or adjoining it, the need for which shall be determined solely by the City, shall be paid for and installed by the City. Street signs shall be placed at each intersection designating the names of the streets at said intersection. The location and the number of signs, including but not limited to, stop, speed limit, and pedestrian crossing signs, shall be determined by the City at the time of Improvement Plan review.

(G) **Right-of-Way and Easements.** Right-of-way and easements shall be provided for public and private streets and utilities with said easements required along rear, side, and front lot lines. The following minimum requirements shall be considered in planning the subdivision or development layout:

(1) Right-of-way widths outlined in the Municipal Standard Details for various street classifications shall be planned for.

(2) All easements shall be designated as "utility" easements, "utility" being defined by Code herein.

(3) All lot frontages, paralleling street right-of-way, shall have a minimum **ten (10) foot** wide easement.

(4) All side lot lines shall have a minimum **five (5) foot** easement either side of the property line.

(5) All side lot line easements shall be increased to include all conduit's width and a minimum of **two (2) feet** beyond the exterior of said conduits.

(6) All side lot lines abutting existing tracts shall be considered rear lot lines.

(7) All rear lot line easements shall be a minimum **twenty (20) feet** wide.

(8) Additional right-of-way shall be provided for: larger areas of pavement required at intersections and other areas where non-typical pavement widths are required; ditches required alongside streets where earthen slopes are necessary and cannot be part of usable lot area; the earthen slopes described previously; signal areas surrounding intersections; access to particular facilities outlined in this Section; areas near railroads; and other areas where the City deems additional right-of-way is necessary.

(9) Additional easement will be required adjoining the additional right-of-way areas described above, similar to those parallel to right-of-way along linear street sections, of the same width as that along linear street sections. Additional easement will also be required for particular facilities outlined in this Section and other areas where the City deems additional easement is necessary.

(10) All drainage systems including but not limited to conduit and structures; all jurisdictional drainageways and base flood areas; all municipal-jurisdictional drainageways and base flood areas; other ditches, streams, and low-lying areas; detention or retention areas to their base flood elevation and accessways shall be placed or located in easement wide enough to allow vehicular access beyond/along the banks of the drainageway.

(H) **Lots.** Lot areas and dimensions shall conform to the minimum dimensional requirements of the applicable zoning district of the City Zoning Code and the following:

(1) Land reserved for street improvements shall not be counted to satisfy the minimum requirements.

(2) Land reserved in easement for floodplain, detention areas, and other inundated areas as defined by this Code shall not be counted to satisfy the minimum requirements.

(3) Property lines shall be arranged to provide each lot or parcel vehicular and pedestrian access to a public street dedicated as right-of-way owned by the City with a minimum frontage of **fifty (50) feet.**

(4) Lots with double frontage such as corner lots shall meet frontage and setback requirements of applicable zoning requirements.

(5) All lots and parcels shall contain adequate space for off-street parking and loading. The City shall require that loading facilities that will experience particular vehicular usage to be arranged such that streets are not used to facilitate vehicular movements.

(6) All remnants of lots below minimum lot size left over after subdivision of a larger tract shall be added to adjacent lots rather than allowing these to remain as usable land except when designated for utility purposes or accepted for public use.

(7) All lots that are to be retained by the developer shall be numbered with similar sequence as those to be sold.

(8) All lots shall be graded such that surface water will drain away from structures.

(I) **Treatment of Detention or Retention Facilities.** These facilities require additional planning. Design requirements for these are in subsequent sections of Code. The following requirements shall be considered and addressed in initial planning stages:

(1) Additional definition of detention facilities is required as even inlet intakes can serve to detain flows. For the purpose of design and definition in this Code, inlet and culvert intakes and conduits within public areas will not be considered as contributing to detention volume unless included in Common Ground or Outlot areas, and, the detention and/or retention area will include all surface area inundated at the peak water surface at the **one hundred (100) year** event for the individual system(s).

(2) Detention or retention facilities shall not be located in the path an existing ditch, stream, jurisdictional and municipal-jurisdictional drainageways, or base flood areas so as to

create higher backwater and reduce storage for incoming discharges. Side-channel facilities are discouraged, but when necessary, the same backwater and loss of storage criteria for jurisdictional and municipal-jurisdictional drainageways shall apply.

(3) Existing ponds and lakes can be utilized as detention facilities with drainage calculations that show there is sufficient storage above normal pool elevations for those that are not located in the path of an existing ditch, stream, jurisdictional and municipal-jurisdictional drainageways, or base flood areas. For those existing ponds and lakes that are located as such, no additional water surface increase will be allowed above existing normal pool elevations and additional excavation will be required to limit the described increase. The developer may be required to reconfigure existing storage and outlet configuration depending on the needs of the subdivision.

(4) All facilities requiring permitting by the IDNR shall be designed prior to submittal to the IDNR. The developer may obtain classification by the IDNR prior to design, but this will not be considered final until design plans are submitted to the IDNR. All submittals to the IDNR and other agencies involved shall be copied to the City.

(5) The City will not undertake the maintenance of detention or retention facilities. These facilities shall be included in Common Ground or Outlot to be owned by a Homeowner's Association or individual property owner. The developer must prepare a separate written maintenance agreement in addition to any restrictive covenants between the City and the subsequent owner(s) before approval of a Final Plat.

(6) Underground detention systems are allowed for developments. However, public drainage systems including drainageways with surface discharges, but primarily conduits within right-of-way and easement, shall only discharge to or pass discharges through detention or retention facilities that are of an open basin design, i.e. earthen slopes accessible by vehicles, and not of an underground type. This is due to the potential high costs for emergency maintenance or expansion.

(7) The entire detention or retention area within Common Ground or Outlot shall be included in easement so as to allow emergency and general access by the City, to reserve the right of the City to expand or make improvements to the facility, and to reserve the right to discharge additional runoff into said facility.

(8) No lot area or associated lot boundary shall extend into the base flood area of the detention or retention facility.

(9) Access shall be provided to the outlet or pumping station area of the facility via easements and a paved road, as prescribed in this Code. This reservation may also be used by the City for electrical distribution to any pumping station and other utilities.

(10) Detention or retention facilities shall be designed for the entire tract being platted. In the event that phased construction and platting will occur, a separate design just for the tracts being platted shall be required. The developer may construct and/or plat the full facilities with initial phases, however, the outlet design shall coincide with the separate design requirements.

(11) Storm water discharges from commercial, industrial, and multi-family lots or tracts will be treated differently than for those that are strictly single-family due to their potential magnitude and impact on surface flows within street and backlot areas. When said discharges enter into a public conduit system, with or without detention on the lot(s) or tract(s) themselves, said conduit system shall be designed to accommodate the **one hundred (100) year** event discharge from said lot(s) or tract(s) with the same freeboard and capacity requirements as for the same system normally designed to accommodate the **ten (10) year** event discharges. All conduit serving the described land use requiring shall be designed to accommodate the **one hundred (100) year** event. Drainage calculations, primarily hydraulic grade lines, shall be provided that show what will occur in conduits and connected inlets that enter into the described **one hundred (100) year** system(s) serving single-family land use at coincident **one hundred (100) year** events in both systems.

(12) Outlets from detention systems on individual lots or development tracts that are not for public use and those that serve only a few lots within an entire development (public) must be connected to appropriately sized public conduit that extends to each lot being served. Outlets from described systems must connect to the public system via buried conduit. When outlets from development tract detention systems are connected to existing public systems that were not designed to accommodate lower frequency events, release of discharges from said tract at all storm frequencies shall not exceed those of pre-development conditions at the **ten (10) year** frequency.

(13) Parking lot and roof top detention systems will not be allowed except in business areas where buildings are in close proximity to each other as deemed such by the City.

(14) Pre-development discharges from the subdivision or development shall remain unchanged or reduced in terms of type and quantity of flow and/or velocity at every point of discharge along the boundary of the tract including existing sheet flow conditions at all storm event frequencies. Detention facilities shall be installed to effect this. Note the exception to this is that buried conduit connections to existing public systems from detention system outlets of development tracts shall discharge only pre-development flows at the **ten (10) year** frequency.

(15) Proposed detention and retention facilities including outlet structures shall be constructed before any proposed grading begins.

(16) In the event that downstream roadways, right-of-way, properties, conduit systems, or combinations of the aforementioned are at such an elevation such that pre-development discharges to said areas cause periodic inundation such that roadway and continuous access are disrupted periodically or there is inundation of conduit systems adversely affecting downstream properties, the City will require the developer to secure easements and/or additional measures to effect minimum downward slope requirements of this Code from the outlet points of the proposed subdivision or development.

(J) **General Drainage.** Design requirements pertaining to drainage systems other than detention or retention facilities are in subsequent sections of Code. The following requirements shall be considered and addressed in initial planning stages:

(1) No tract or portion of a tract shall be approved for development if it is subject to periodic flooding such that lots or pavements and other infrastructure are periodically inundated. This extends to jurisdictional and municipal-jurisdictional drainageways and base flood areas.

(2) All inhabitable shelters including basements shall be a minimum of **one (1) feet** above jurisdictional and municipal-jurisdictional drainageway flood elevations (the base flood elevation at the **one hundred (100) year** event) in the vicinity of the subdivision or development regardless of whether said flood elevations extend into the tract, and a minimum of **one (1) foot** above water surfaces associated with a **one hundred (100) year** event occurring in conduit and drainageways. All driving surfaces including private parking lots, all sidewalks, and other similar walking or bicycle

surfaces shall also be a minimum of **two (2) foot** above jurisdictional flood elevations.

(3) All areas and features requiring, State, Federal, or other Local review and approval shall be identified prior to the Preliminary Plat approval process.

(4) Storm runoff from areas upstream and downstream of the subdivision or development must be accommodated by systems proposed, in accordance with requirements of this Code. In general, runoff from upstream shall be passed through unimpeded in terms of backwater and storage. Storage utilized by constrictions downstream shall remain. Future development upstream and downstream, private or public (by the City), that is pending at the time of the subdivision or development approval process initiation shall be accommodated in design.

(5) For all drainage design the most conservative interpretations will be made, including but not limited to: accounting for conduit systems for pending or existing upstream development such that the most conservative discharges reach the subdivision or development being considered and accounting for existing and future backwater effects downstream. The City reserves the right to require application of the most conservative interpretations in terms of drainage design for the subdivision or development being considered. The City also reserves the right to require drainage calculations extending beyond the subdivision or development being considered and impacting the same.

(6) Underground, or buried, conduit systems shall remain generally perpendicular at street crossings to facilitate future maintenance.

(7) All single family residential roof and foundation drains not utilizing sump pits and pumps to the front and rear of lots and not to side lot lines except when storm sewer, or underground conduit other than sump sewers, touches the lot. In these cases said drains shall be connected via buried conduit within the property to the storm sewer, or underground conduit. Roof and foundation drains not utilizing sump pits and pumps shall not be connected to those drains discharging from sump pits and pumps on the property or within easement and right-of-way.

(8) All multi-family, commercial, and industrial roof and foundation drains not utilizing sump pits and pumps shall be discharged, via buried conduit, into underground conduit systems including storm sewers and culverts and not above or across ground surfaces in any fashion.

(9) No roof or foundation drains that do not pass through a sump pit and are pumped by a sump pump shall enter into sump sewers.

(10) All lots shall be graded and foundations prepared to insure that roof drains can be buried a minimum of **two (2) feet** at the building and then such that the buried conduit for these drains slopes to the connection with conduit systems at a minimum of **0.30%**. No roof drains will be allowed to have 'inverted siphons' such that their flowline slopes down and then up. This is to prevent standing water in said conduit and to alleviate potential damage at foundations.

(11) Sump sewers, as defined by this Code, shall be installed in easement or right-of-way to accommodate sump pit discharges to all lots that do not have storm sewer or other underground conduit touching said lots. Sump sewers shall not have inlets or open ends such that direct surface runoff enters into sump sewer conduits. Sump sewers shall be connected, underground, to storm sewer and other underground conduits or municipal-jurisdictional drainageways or larger drainageways. Upstream ends of sump sewers that are not connected to other non-sump sewer conduit systems shall be terminated with inlets or manholes with closed lids.

(12) Sump sewers shall serve properties in a fashion equal to that for sanitary sewer services in that each individual property's sump line from the building(s) to the sump sewer shall not pass through adjoining properties.

(13) The City has no maintenance responsibility for nor any responsibility to remediate backups in above ground or buried conduits from their taps to sump sewers or storm sewer conduits to their connections to at the buildings draining storm runoff via roof drains or sump pit drains that might occur due to high water surfaces in City owned and maintained conduits and drainageways.

(14) All developments' roof and parking area runoff must pass through detention systems, on-site within a particular lot or through a common detention area, before exiting the tract boundaries.

(15) All commercial and industrial tracts' roof and parking area runoff served by a common detention or retention area for a particular subdivision shall pass through buried conduit within the tract before entering into the public storm sewer system at an inlet or manhole.

(K) **Potable Water Systems.** Design requirements are in subsequent sections of Code. The following requirements shall be considered and addressed in initial planning stages:

(1) A potable water service shall include the connection at the main and service line from the main to the meter pit. The meter pit and meter will be installed by the City and the costs for these will be included in the tapping fees. Services shall not be installed before testing of the main.

(2) The City will own, maintain, and replace, as necessary, water services from their tap to the main, under any pavement, within right-of-way and easement, to the point of entry into the meter pit. The City will replace any pavement, curb, and sidewalk for water service repairs and costs for this work will be borne by the City.

(3) Each lot in a subdivision and each development tract shall be provided with water service at the easement adjoining right-of-way.

(4) Services shall be positioned at the prerogative of the City, however, no cleanouts or other vertical or horizontal changes in lateral alignments other than at the immediate point of connection with the main will be allowed in right-of-way and easement. The City prefers services to be positioned near the sides of the lot frontage to right-of-way with **two (2)** adjoining properties' services at a shared side lot line.

(5) Each residence of a duplex, villa, or condominium shall have a separate water service.

(6) For services larger than the minimum required for a single residence additional costs will be charged to the developer.

(7) Service lines shall not cross the projection of a single lot frontage onto an adjoining lot frontage. Service lines shall generally be perpendicular to right-of-way.

(8) Proposed water system extensions shall tap existing water mains in a manner so as to minimize the impacts to users of the existing water mains. This includes use of tapping sleeves and valves.

(9) The proposed water system extension shall connect to existing water main systems at a minimum of **two (2) points**, unless deemed unnecessary by the City.

(10) Mains shall remain in street right-of-way and easement to facilitate access for maintenance. The City intends for mains to be predominantly parallel to street systems.

(11) Mains constructed under pavement shall be avoided wherever possible.

(12) Existing and proposed mains larger than **twelve (12) inches** in diameter shall not have services connected directly to it. A smaller main shall be connected for subsequent tapping for services.

(13) Fire hydrants shall be located such that all lots are within a minimum of **four hundred (400) feet** of the hydrant measured along the center of right-of-way or street except for cul-de-sacs and for these the **four hundred (400) feet** shall be increased to **five hundred (500) feet.**

(14) Encasement of water mains other than those required by the IEPA will be required for certain size creek crossings and beneath certain size drainage structures, as prescribed in subsequent sections of Code.

(15) Water valves shall be installed such that no more than **eight hundred (800) feet** of proposed mains shall be put out of service at any single time in the future in residential areas. The same shall apply in commercial and industrial areas except that the **eight hundred (800) feet** shall be reduced to **four hundred (400) feet.**

(16) The City reserves the right to adjust proposed valve placements and add additional valve locations as they deem necessary.

(17) All water mains at the boundaries of subdivisions and developments shall be terminated in a manner that will facilitate the extension of these in the future. This requires placing a typical valved hydrant for flushing at the termini of a system, then a valve, and then a **fifteen (15) foot** minimum length of main with a cap and block. This requirement may apply not only to systems paralleling streets that will extend into other properties in the future, but also in locations where mains do not parallel streets, at the prerogative of the City. The valves and hydrants shall be equivalent to those used throughout the development and smaller flush hydrants shall not be used.

(L) **Sanitary Sewer Systems.** Design requirements are in subsequent sections of Code. The following requirements shall be considered and addressed in initial planning stages:

(1) Gravity-fed sanitary sewer systems shall be defined as systems that do not require pressurized flow.

(2) Lift stations that include gravity-fed systems entering into a manhole, or wet well, that discharge through a valve vault and then into a pressurized force main will be allowed in the event existing topography is not conducive to a gravity-fed system. However, the City reserves the right to determine if the tract or development in question is conducive to said system and the City may require the developer to postpone or discontinue the development process so as to limit the City's number of lift stations in the City's jurisdictional areas. In the event that a tract being developed as a subdivision requires a

lift station and force main system, and the City has approved this need, the City reserves the right to prescribe the location, capacity, and depth of these within the subdivision or development.

(3) Each lot in the subdivision or development shall be provided with gravity-fed service, at the easement adjoining right-of-way such that the projection of the service lateral from the point of connection, at a minimum **one percent (1%)** slope, shall serve a depth **four (4) feet** below minimum first floor elevations proposed for each lot. This will also be required in commercial and industrial tracts.

(4) The City shall not own, maintain, and replace, as necessary, sanitary sewer services from their tap to the main, under any pavement, within right-of-way and easement, to easement line as these shall be owned by the property owner served by the service. The City will not replace any pavement, curb, and sidewalk for sewer service repairs and costs for this work will be borne by the homeowners after completion of the development.

(5) Service laterals shall be positioned at the prerogative of the City, however, no cleanouts or other vertical or horizontal changes in lateral alignments other than at the immediate point of connection with the main will be allowed in right-of-way and easement. The City prefers service laterals to be positioned near the center of the lot frontage to right-of-way.

(6) Service lines shall remain within the boundaries of each lot and shall not pass through adjoining lots. Where service lines enter into public easement and right-of-way, the lines shall not cross the projection of a single lot frontage towards the right-of-way. Services shall be generally perpendicular to right-of-way.

(7) In the event there are multiple residences or businesses in a single building, other than an apartment building that will be owned by a single entity and not individual tenants, separate service lines shall be extended from a main on the side of the street of the residences or businesses at the easement line, to each residence or business, arranged, as noted herein.

(8) Service laterals shall not enter directly into manholes.

(9) Mains shall remain in street right-of-way and easement to facilitate access for maintenance. Mains shall be predominately parallel to street systems.

(10) Mains constructed under pavement shall be avoided wherever possible.

(11) Mains shall terminate at tract or phased development boundaries and shall have a manhole and a **twenty (20)** foot

stubbed section of main at the minimum slope allowed for the size of main being used that is capped, for future extensions.

(12) The profile slope of mains shall be designed to accommodate gravity-fed service laterals from all lots and buildings such that individual lift stations are not required at each lot and building. In no circumstance will any individual lot or development lift station system force main be allowed beyond the lot itself nor the projection of said lot's frontage generally perpendicular to right-of-way.

(13) Gravity-fed systems shall be designed to serve areas beyond the platted boundary or total tract, if phased improvements are planned. The service area shall be defined by a boundary extending **one thousand (1,000) feet** from the total tract boundary or the next natural high point in topography, whichever is greater, in all directions.

(14) All manholes shall have tops a minimum of **three (3) feet** above the **one hundred (100) year** water surface occurring throughout the subdivision or development.

(15) The City will not be involved in any recoupment agreements between developers planning to deepen immediate sanitary sewer installation. Upon dedication of easements and sanitary sewer mains, these become available for public use.

(16) In areas where gravity-fed systems that are connected to existing City systems are not cost-effective or desired by the City, the developer shall install gravity-fed systems throughout the proposed subdivision or development with service laterals to each lot. The system shall serve each lot at depths required by this Code. Said systems shall be designed and constructed in accordance with requirements of this Code. Ponds, lagoons, mound systems, package plants, and other multi-user treatment facilities are prohibited within the City's jurisdiction. In addition to the systems required herein, the minimum lot size shall be **forty thousand (40,000) square feet** and a temporary septic system shall be installed where seepage tests conducted by the County Health Department indicate soils are suitable for such installations.

(17) The City reserves the right to require the developer to have prepared, calculations of the anticipated sanitary sewer discharges generated by the subdivision and development and the existing downstream capacity of the existing sanitary sewer systems. Depending on the magnitude of this loading, the limits for these calculations may extend an indefinite distance beyond the immediate area of the subdivision or development. The City may require the developer perform

capacity testing at existing lift stations, as the City deems necessary.

(M) **Lighting.** Street lights shall be provided at each intersection of streets and alleys and at the end of each cul-de-sac in subdivisions and developments, but in no event shall there be less than **one (1) street light** per **three hundred (300) feet** of street frontage between intersections or an intersection and terminus of a dead end street. For subdivisions and developments with multi-family dwellings, lights for parking areas shall be provided at a frequency of **one (1) light** per **twenty-five (25) parking spaces**. The developer shall pay the costs for the design and installation of the lighting system.

(N) **Other Utilities and Features.** Electrical power, gas, telephone, cable television, and other utilities shall be placed underground throughout the subdivision or development. The following requirements shall be considered:

(1) Conduit or cables shall be located within easements and right-of-way in a manner which will not conflict with other utilities.

(2) All transformers and terminal boxes shall be located so these are not detrimental to safety.

(3) The City intends for conduit, cables, transformers, terminal boxes, and other utility appurtenances to be predominately parallel to street systems, accessible from the streets.

(4) Utilities that will be under pavements shall be installed prior to pavement construction. Boring and jacking or directional bores will be allowed for small diameter systems as determined solely by the City.

(5) Expenses for service connections or tap-ons from the main utilities to the easement lines of each lot shall be borne by the developer.

(6) The location; type; size; pressure rating; easement limits, both on the subdivision or development and any **one hundred (100) feet** from the tract boundary; and other information for transmission lines such as power, gas, oil, or any other type shall be depicted on all plats and Improvement Plans.

(7) The City reserves the right to require realignment, vertically or horizontally, of any or all proposed infrastructure presented at the time of Improvement Plan reviews to avoid conflicts with necessary utilities insofar as said realignments do not require significant changes to proposed right-of-way and street alignments.

(8) No new building or land disturbance shall be permitted within **twenty-five (25) feet** of any natural gas, petroleum, or other type transmission pipelines. No building or structure or part thereof which is used for the manufacturing, processing, generation, or storage of corrosive, highly toxic, oxidizing, pyrophoric, water reactive, highly combustible, flammable, or

explosive materials that constitute a high fire, explosion, or health hazard, including loose, combustible fibers, dust and unstable material, shall be constructed within **one hundred twenty-five (125) feet** of any described transmission line.

(O) **Driveways.** Shall be constructed of Portland Cement Concrete or Bituminous Surface Course within right-of-way. Driveways shall be constructed per the Municipal Standard Details. Commercial driveways or entrances shall be designed to allow the design vehicle associated with the adjoining street classification to enter and exit such that their movements do not encroach onto opposing lanes on the street and on the driveway itself. The maximum allowable driveway slopes from areas required for pedestrian and disabled persons shall not exceed **eight percent (8%)** longitudinally from said areas to their point of entry to the home or garage.

(P) **Street Names and Addresses.** All streets which are extensions of existing streets shall bear the same name as the existing street. Street names shall be sufficiently different than existing streets in the City. The County 911 coordinator shall review street names and addresses before approval of the Final Plat.

(Q) **Trees.** All trees having a diameter of **two (2) inches** or more, measured **twelve (12) inches** above the ground, shall be retained and protected utilizing methods prescribed by current IDOT practices.

(R) **Dedications for Public Use.** The City will require the developer to dedicate to the City or other appropriate governmental entity, suitable parcel(s) of land within the subdivision or development for parks, playgrounds, schools, or other public purposes provided the need for such facilities is uniquely and specifically attributable to said subdivision. Any such dedicated area shall be shown in the Preliminary Plat, Improvement Plan, and Final Plat submittals.

If a tract of land suitable for such purposes is not available within the subdivision or development, the City may require that, as a condition for approvals, the developer deposit funds with the City to acquire or improve recreational or educational facilities that are/will be located in the vicinity of the subdivision and available and beneficial to the residents thereof. The amount of the required deposit shall not exceed that portion of the cost of such acquisition/improvement which is uniquely and specifically attributable to the subdivision.

(S) **Reservations for Public Use.** Instead of -- or besides -- requiring the developer to dedicate parcels, the City Council may require that the developer reserve land for parks, playgrounds, schools, or other public purposes in locations designated in the municipal comprehensive plan. Since public acquisition of reserved land requires compensation, it is not essential that the need for such land be uniquely and specifically attributable to the subdivision.

The City may take action to purchase or condemn any land reserved for public purposes within **twelve (12) months** from the date of final plat approval. Failure to initiate such action within the prescribed time limit shall result in removal of the reservation and the consequent freeing of the property for other permitted development.

34-2-6 STREET CLASSIFICATIONS AND BICYCLE ACCESSIBILITY. The Municipal Standard Details depict details, including right-of-way, parking, and sidewalk placement, of different street classifications. The developer shall denote their interpretation of street classification on the Sketch Plat and Preliminary Plat with supporting information such as projected ADT's. City Public Works personnel will comment on these classifications at the time of Sketch Plat or Preliminary Plat submittal. Parking and sidewalk will be required on one side of all street classifications, except in the case of a Major Collector, when there are no lots abutting the Major Collector on one of its sides. For this case, the Major Collector shall have widths equal to that for a Local Collector with Type B-6.18 curbing. All streets in business or industrial areas shall be business or industrial collectors. For both Local Collectors and Major Collectors, a wider sidewalk shall be constructed for bicycle accessibility. Transitions between different street classifications may be required for some developments. Transition details shall be based on IDOT design requirements and these shall be shown on plans.

34-2-7 DOCUMENTS GOVERNING PLANNING, DESIGN, AND CONSTRUCTION. All studies, traffic studies, geometrics, drainage calculations, structural designs, pavement designs, construction details, material types, and construction inspection testing requirements shall be in general accordance with the most current of the following, except as modified by this Code:

(A) Illinois Department of Transportation (IDOT):

(1) Bureau of Local Roads and Streets Manual,
(2) Drainage Manual and Appendix,
(3) Standard Specifications for Road and Bridge Construction,
(4) Supplemental Specifications and Recurring Special Provisions,
(5) Culvert Manual,
(6) Bridge Manual,
(7) Construction Manual,
(8) Project Procedures Guide,
(9) Highway Standards,
(10) Other IDOT references deemed applicable by the City on a case-by-case basis;

(B) Standard Specifications for Water & Sewer Main Construction in Illinois;

(C) United States Geological Survey - Estimating Flood-Peak Discharge Magnitudes and Frequencies for Rural Streams in Illinois;

(D) Illinois Environmental Protection Agency (IEPA):

(1) Title 35, Subtitle C, Chapter II, Part 370, Illinois Recommended Standards for Sewage Works;
(2) Title 35, Subtitle F, Chapter II, Part 652, Permits;
(3) Title 35, Subtitle F, Chapter II, Part 653, Design, Operation and Maintenance Criteria.

(E) Illinois Department of Public Health:

(1) Illinois Plumbing Code.

The City reserves the right to require the developer to utilize design, detailing, and construction criteria from other references other than those listed above as the City deems necessary. The City reserves the right to establish construction sampling and testing frequencies greater than those prescribed in the IDOT Project Procedures Guide.

34-2-8 PLATTING AND DESIGN RESPONSIBILITY. In addition to requirements that an Illinois Registered Land Surveyor prepare plats, the following shall also be required for design calculations and Improvement Plans:

(A) Site Geotechnical Report signed and sealed by an Illinois Registered Professional Engineer with geotechnical engineering qualifications.

(B) Drainage Calculations shall be signed and sealed by an Illinois Registered Professional Engineer.

(C) Structural design calculations required by IDOT references shall be signed and sealed by an Illinois Registered Structural Engineer. All Improvement Plan drawings with structural details including, but not limited to, non-standard precast box culverts, bridges as defined by IDOT, retaining walls greater than **four (4)** in height, and all other structural features defined by the City (generally those other than circular inlets and manholes) shall be signed and sealed by an Illinois Registered Structural Engineer.

(D) Illinois Environmental Protection Agency permit applications shall be signed and sealed by an Illinois Registered Professional Engineer.

34-2-9 PHASED DEVELOPMENT. When a developer is undertaking phased development of a tract or multiple tracts, the entire tract(s) must be depicted via the Sketch Plat (optional), Preliminary Plat, and Improvement Plans with all required calculations and submittals for all proposed improvements for the entire tract. This is to insure that proposed infrastructure is planned comprehensively for as large an area as possible, i.e. sanitary sewer mains and lift stations, detention systems, etc. The Preliminary Plat and Improvement Plans shall have that section being constructed, coinciding with the section shown on the Final Plat, clearly delineated.

The Final Plat, or Plats, shall coincide with the phase of the Improvement Plans being constructed and shall not show, as part of the platted boundary, future lots and development associated with future improvements within the entire tract.

Special attention is called to drainage systems, including detention and retention facilities. The area of the detention or retention facility associated with the improvements for the entire tract(s) and not just those being platted shall be included in the platted boundary of review. The detention or retention facility outlet systems shall be designed to detain only the pre-development discharges associated with the areas being platted through the reservation of surface area and volume shall be designed for the entire tract(s). No improvements shall begin until the detention or retention facility associated with those improvements is constructed.

Approved Preliminary Plat and Improvement Plans which show information for the entire tract(s) will expire within **five (5) years** of approval of Improvement Plans for the initial phase, though action on approved Preliminary Plats initiates earlier than **five (5)**

years as noted in other sections of this Code. Improvement Plans associated with each initial and subsequent Final Plat boundaries desired for recording shall be submitted, and these shall depict constructed improvements (record drawings). Within said time period, Final Plats associated with other sections of the approved Preliminary Plat and Improvement Plans for the entire tract may be submitted.

34-2-10 IMPROVEMENTS BEYOND PLATTED BOUNDARY. All improvements beyond the platted boundary including, but not limited to, potable water mains, sanitary sewer systems, utilities, drainage systems including those on the surface and underground conduits, and detention or retention facilities, shall be included in permanent easements or right-of-way dedicated to the City and platted via separate documents including a Plat of Easement and easement agreement or other approved instruments.

Additionally, when there are proposed infrastructure improvements beyond the platted boundary such as sanitary sewer main extensions, detention systems, etc., being dedicated by separate documents, said improvements shall be included as part of the Improvement Plans and shall be designed in conformance with requirements of this Code for such improvements. This extends, for example, to the sizing of sanitary sewer systems as gravity-fed systems to intercept **one thousand (1,000) feet** beyond the platted boundary.

34-2-11 ACTION ON THE SKETCH PLAT. Within **one (1) year** following the date of City Council approval of the Sketch Plat, the developer shall submit a Preliminary Plat to the City depicting an identical boundary, street and lot layout, street classification, and any other special consideration agreed upon by the City and developer during the Sketch Plat approval process, such as utility locations, to remain valid and unchangeable by the City prior to and during the Preliminary Plat review process. The approval of the Sketch Plat shall expire within **one (1) year** after approval, otherwise.

ARTICLE III

PRELIMINARY PLAT

34-3-1 DEFINITION AND PURPOSE. A Preliminary Plat must be prepared, submitted to, and approved by the City before Improvement Plans are similarly prepared and submitted. A Preliminary Plat details the tract being subdivided or developed, its boundaries, the intended divisions into lots and right-of-way, and various infrastructure that will be detailed further during the Improvement Plans stage. As defined previously in this Code, the City may determine that a Preliminary Plat is required for a development other than that required for subdivision into lots. A Preliminary Plat shall include the entire tract development in all situations including a those portions of the that that will be developed in phases.

34-3-2 PREPARATION. The developer shall review applicable Code, ordinances, zoning, Comprehensive Plan, and regulations. No Preliminary Plat shall be considered until Annexation, when required, is complete. General street layout, street construction, drainage, water mains, sanitary sewer systems, utilities, and other facilities shall be contemplated as these shall be depicted on the Preliminary Plat and discussed with City personnel. In the event that the Sketch Plat process was undertaken, the Sketch Plat was approved by the City, and the developer is acting on the Sketch Plat approvals by submission of a Preliminary Plat within the time allotted for said submittals, the City shall not request changes to the approved information of the Sketch Plat limited to the boundary, lot and street layout, street classification, and any other special consideration agreed upon by the City and developer at the time of Sketch Plat approval. Nor shall the developer. The developer shall depict identical information approved for the Sketch Plat on Preliminary Plat submittals.

34-3-3 COUNTY SOIL AND WATER DISTRICT. At the time of filing with the City, the developer shall also file at least **one (1)** Preliminary Plat and supporting data with the County Soil and Water Conservation District. Said District shall have not more than **thirty (30) days** to submit comments to the Planning Committee, in accordance with State Statutes.

34-3-4 SUBMITTAL AND REVIEW. The developer shall prepare and submit **three (3) copies** of the Preliminary Plat and required review fees (see **Preliminary Plat Requirements** of this section of Code) to the City's Public Works personnel. Following a period of **twenty-one (21) days** of review, said personnel will provide the developer, the Planning Committee, and the Mayor and City Council, with a written letter of comments. The developer will then have a period of **twenty-one (21)**

days to respond to comments by the City Public Works Department personnel in writing, with a revised Preliminary Plat, as required. The City Public Works Department personnel will then review again for a period of **twenty-one (21) days** and either respond in writing to the same persons, either requesting changes or recommending approval by the Planning Committee.

In the event changes are required, the same period of **twenty-one (21) days** of response and review would continue until the City Public Works personnel are satisfied the Preliminary Plat is adequate for submittal to the Planning Committee; or in the event the developer wishes to appeal changes required by City Public Works personnel, the developer shall include in his response a written description of disagreement of enumerated feature or features and then submittals go directly to the Planning Committee.

The Planning Committee, upon receipt of the approved Preliminary Plat from the City Public Works personnel shall have a maximum of **sixty (60) days** from receipt to approve or disapprove the Preliminary Plat and then another **sixty (60) days** to respond to the developer. The developer may then proceed with revisions, if disapproved by the Planning Committee, and resubmit a written response and revisions in a period of **twenty-one (21) days**. The Planning Committee will then have another **forty (40) days** of review for approval or disapproval.

In the event changes are required, the same period of **twenty-one (21) days** and **forty (40) days** shall apply; or, in the event the developer wishes to appeal changes required by the Planning Committee, the developer shall include in his response a written description of disagreement of enumerated feature or features and then submittals go directly to the City Council.

The City Council, upon receipt of the approved, or partially approved, Preliminary Plat from the Planning Committee, will have **thirty (30) days** to approve the Preliminary Plat. In the event the City Council does not approve the Preliminary Plat, the developer will have **twenty-one (21) days** to resubmit to the City Public Works Department personnel and then the process described above starts over. The City Council shall not qualify a Preliminary Plat for recording.

Approval of the Preliminary Plat by the City shall not absolve the developer of responsibility of adhering to Code and State, Federal, and Local Agency requirements more restrictive than those of Code, and in the event that said conflict with Code, approval of the Preliminary Plat will be considered conditional until said requirements are met.

The City reserves the right to extend developer response and City review times noted herein in the event that additional information, such as a traffic study, is required by the City.

34-3-5 **PRELIMINARY PLAT REQUIREMENTS.** The Preliminary Plat shall be graphically depicted on **twenty-four (24) inch by thirty-six (36) inch** size prints, and have the following minimum information:

(A) **Administrative.**

(1) Deed and title commitments showing proof of ownership, upon the request of the City.

(2) Names, addresses, signatures, and dates of signatures of the owner, developer (if not the owner), Illinois Registered Land Surveyor, and Engineer. These are not certifications, but are for information only.

(3) Proposed name of the subdivision which shall be a simple, complete, and explicit title which does not duplicate the name of a previously recorded plat, except in the case of Additions.

(4) The date, including month, day, and year.

(5) The legal description of tract being subdivided or developed.

(6) The acreages of the tract prior to subdivision, Area, Gross; and the Area, Net.

(7) The Zone District Classification and proposed land use.

(8) Restrictive covenants, if any, subject to all ordinances and regulations of the City, to be recorded with the Final Plat.

(9) Street names for each proposed street. These shall be sufficiently different in sound and spelling from other street names in the City so as to avoid confusion. Proposed streets that are continuations of existing streets shall bear the same name as the existing streets. The City reserves the right to change proposed street names in the interest of the City. Coordination shall be made with the Clinton County 911 Coordinator in order to prevent duplication of names in the City at a minimum, and preferably within the County.

(10) A certification by the owner in fee of all the property embraced by the Preliminary Plat, stating that the Preliminary Plat is the free and voluntary act of the owner, the owner's intention to dedicate to public use forever the right-of-way and easements shown on the Preliminary Plat including that adjoining existing right-of-way, and that the lines defining lots intended for future sale to other owners shown will be referenced in all future conveyances of lots.

It is recommended that the developer's Land Surveyor prepare the boundary survey prior to this certification. The developer's Land Surveyor does not formally sign and seal said survey until the Final Plat approval process.

(B) **Existing Topographical Information.**

(1) North arrow and scale, not to be less than **one (1) inch** equals **fifty (50) feet.**

(2) Elevations based on North American Vertical Datum 88 (NAVD88), mean sea level (MSL).

(3) Contour lines at minimum **one-half (1/2) foot** intervals.

(4) Horizontal controls based on North American Datum 1983, Illinois State Plane System, West Zone.
(5) The name of each adjoining subdivision, intersecting street, and ownership of adjoining unsubdivided land.
(6) The position and character of all boundary markers set and/or found.
(7) Right-of-way lines.
(8) Lot lines and easements of each adjoining subdivision and tract, including the name of the owner of said easements and tracts.
(9) Existing easements within the proposed subdivision or tract, including the name of the owner of said easements.
(10) Topographical features such as existing trees; brush lines; fences; sanitary sewer manholes; water valves; overhead electric poles and guys; all above ground utilities; edges of pavement; curb lip, flowline, front face, and back; centerline of existing streets (coinciding with crown and not center of right-of-way); building corners; outlines of pavement and aggregate surfacing; drainage structures including inlets, manholes, headwalls, faces of boxes, detention outlets; creek flowlines denoting direction of flow; ponds, lakes, and other stagnant bodies of water; railroads; cemeteries; parks; schools; and other features that may be deemed necessary by the City, to a point no less than **three hundred (300) feet** beyond the limits of the tract being subdivided or developed.
(11) National flood insurance protection boundaries from flood hazard maps, approximate or otherwise.

(C) **Dimensioning of Existing.**
(1) Bearing and distances of all boundary lines of the tract being subdivided or developed, or the exact angle of intersecting boundary lines.
(2) Reference of that above to the section, quarter section, or land grant lines and corners.
(3) Existing right-of-way and easement widths.
(4) Street widths.

(D) **Proposed Features.**
(1) Proposed right-of-way, lot, easement, and setback lines.
(2) Proposed centerline of streets.
(3) Proposed curb lines, including lip, flowline, front face, and back.
(4) Proposed sanitary sewer manhole locations and main locations with direction of flow indicated.
(5) Proposed sanitary sewage lift station wet wells, valve vaults, force main, and other appurtenances other than manholes.

(6) Proposed potable water main locations with valve and hydrant locations depicted also.

(7) Proposed potable water main appurtenances other than valves and hydrants.

(8) Proposed approximate drainage systems including, but not limited to, inlets, manholes, junction boxes, storm sewers between appurtenances, culverts, structures, and an indication of any channel modification.

(9) Proposed detention or retention facilities and their approximate normal pool elevation.

(10) Inclusion of all of the above features associated with improvements adjoining that are being undertaken by the City and other agencies or will be in the immediate future. Accurate stationing associated with said improvements shall be depicted as reference.

(E) **Dimensioning of Proposed.**

(1) Proposed centerline stationing every **fifty (50) feet**. It is recommended that beginning stationing coincide with a boundary or property line.

(2) Curve data for all centerline curves including point of intersection station, delta angle, degree of curve (chord definition), radius, tangent, length, external, and points of curvature and tangent stations.

(3) Pavement lane widths at various points.

(4) Pavement and curb lane transition lengths, wherever applicable.

(5) Dimension of all radii at intersections or notation in text thereof.

(6) The measurement of all lot line and lot corner angles or the direction thereof.

(7) Front, side, and back lot and outlot line lengths for all lots.

(8) All lot, outlot, and dedication areas other than rights-of-way and easements in square feet.

(9) Progressive numbering, without letter prefixes or suffixes, of all lots.

(F) **Documentation.** In addition to graphical depictions of the tract being subdivided or developed, the developer shall also present the following to the City:

(1) A site Geotechnical Report signed and sealed by an Illinois Registered Professional Engineer with geotechnical engineering qualifications.

(2) A projection of the number of households; population; and employees, in the case of commercial or industrial development, in writing.

(3) A description of site generated traffic and its impacts on adjoining street and highway systems, in writing. The City reserves the right, as outlined in previous sections of Code, to require the developer to submit a traffic study at the time of Preliminary Plat submittals.

(4) Calculations of anticipated sanitary sewer discharges from the subdivision or development and the capacity of downstream systems, as outlined in previous sections of Code.

(G) **Review Fees.** No fees are due from the developer to the City at the time of filing of the Preliminary Plat. In the event that the City is required to review submitted Preliminary Plats following a second review by the City, the developer shall pay a non-refundable fee in the amount of **Two Hundred Fifty Dollars ($250.00)** to the City at the time of submittal.

34-3-6 **ACTION ON THE PRELIMINARY PLAT.** The approval of the Preliminary Plat shall expire **two (2) years** after approval by City Council unless the developer shall have presented and secured approval of Improvement Plans as prescribed in this Code within said **two (2) year** period.

ARTICLE IV - IMPROVEMENT PLANS

34-4-1 DEFINITION AND PURPOSE. Improvement Plans must be prepared, submitted to, and approved by the City before approval of a Final Plat or granting of building permits in the case of a non-subdivision type development. Improvement Plans detail various planned infrastructure and facilities in graphical format for the developer, or his contracted agents, to construct said infrastructure agreed to by the City and developer. The term "Improvement Plans" includes associated documents, calculations, and other required submittals. As defined previously in this Code, the City may determine that Improvement Plans are required for a development other than that required for subdivision into lots. Improvement Plans, and supporting information, shall include the entire tract of development in all situations, including all phases. In the event of phased construction, the Improvement Plan submittals shall clearly show the phase that will be constructed, coinciding with the phase of the Final Plat, and provide clear calculations and details that address just the phase being considered in addition to those for the entire tract(s). Improvement Plans for the entire tract or tracts being developed are required with the first platting associated with said tract(s). Subsequent platting shall also require Improvement Plan submittals.

34-4-2 PREPARATION. The developer shall review applicable Code, ordinances, zoning, Comprehensive Plan, and regulations. General street layout, street construction, drainage, water mains, sanitary sewer systems, and other facilities shall be contemplated as these will be depicted in the Improvement Plans. Preliminary Plat information approved by the City may be changed by the City, but not the developer. Except that boundary, lot and street layout, street classification, and any other special considerations established for the approved Preliminary Plat, regardless of whether the developer is acting on the approved Preliminary Plat within the time allotted for subsequent Improvement Plan submittal, shall not be changed. When the Improvement Plans are not submitted within the time allotted for such following an approved Preliminary Plat, the Preliminary Plat review and approval process shall begin over again. The developer shall depict identical information approved for the Preliminary Plat on Improvement Plan submittals. Planning requirements noted in previous sections of this Code shall be adhered to.

34-4-3 SUBMITTAL, REVIEW AND APPROVAL. The developer shall prepare and submit **three (3) copies** of the Improvement Plans and Estimates of Cost, **two (2) copies** of required permit applications, such as IEPA water and sewer permit applications, **two (2) copies** of required calculations, and required review fees (see **Improvement Plan Requirements** within this section of Code) to the City's Public Works personnel (no return). Following a period of **thirty (30) days** of review, said personnel will provide the developer and the Mayor and City Council, with a written letter

of comments. The developer will then have a period of **sixty (60) days** to respond to comments by the City Public Works Department personnel in writing, with revised Improvement Plans as required. The City Public Works Department personnel will then review again for a period of **twenty-one (21) days** and either respond in writing to the same persons, either requesting changes or recommending approval by the City Council. In the event changes are required, the same period of **sixty (60)** and **twenty-one (21) days** of response and review shall continue until the City Public Works personnel are satisfied the Improvement Plans are adequate for submittal to the City Council.

The City Council shall receive the approval of the City Public Works personnel and will have **thirty (30) days** to approve the Improvement Plans and other associated submittals. In the event the City Council does not approve the Improvement Plans, the developer will have an indefinite period of time to resubmit to the City Public Works Department personnel and then the process described above starts over. A re-submittal of Improvement Plans based on a preceding approval of the Preliminary Plat, will only be allowed within the allowed period after approval of the Preliminary Plat after which time the Preliminary Plat approval process must begin again before re-submittal of the Improvement Plans. The aforementioned is for the improvements contemplated for the entire tract. In the event that phased development is occurring and the developer has made proper submittals for the entire tract(s) in terms of the Preliminary Plat and Improvement Plans defined in previous sections of this Code, Improvement Plans for the planned improvements following that for initial improvements may be submitted within **five (5) years** of the Preliminary Plat.

The City Council shall not qualify Improvement Plans dependent on receipt of other Agency approvals except for those required by the IEPA for water and sanitary sewage infrastructure.

Approval of the Improvement Plans by the City shall not absolve the developer of responsibility of adhering to Code and State, Federal, and Local Agency requirements more restrictive than those of Code, and in the event that said conflict with Code, approval of the Improvement Plans will be considered conditional until said requirements are met. It shall not be construed that failure to comment by the City on improvements shown in the Improvement Plans, improvements being constructed, and/or improvements having been completed that do not meet Code requirements absolves the developer of responsibility of adhering to Code and State, Federal, and Local Agency requirements.

Additionally, the City reserves the right to extend developer response and City review times noted herein in the event that additional information is required.

34-4-4 ADMINISTRATIVE REQUIREMENTS FOLLOWING APPROVAL.

The following outlines administrative requirements following approval of the Improvement Plans. The following is associated with the initial platting of the tract, or tracts. Improvement plans associated with other sections within said tract(s) as part of phased development cannot be submitted until **two (2) years** following the initial Improvement Plan approval.

(A) The Improvement Plan approval by the City shall expire **six (6) months** after the date of approval unless the developer commences construction of at least **ten percent (10%)** of the Improvements.

(B) Following Improvement Plan approval the developer will have **two (2) years** to complete the particular phase of the Improvement Plans associated with the Preliminary Plat and Final Plat.

(C) The City will not approve any Final Plat until all improvements within the phase of the Improvement Plans being considered have been completed and inspected by the City or the developer has provided the City with a performance bond or an escrow deposit equal to the City's estimate of the cost (not the developer's) of completing the uncompleted portion of improvements, all required inspection and testing fees, Final Plat preparation costs by the developer's surveyor and engineer, and other costs anticipated by the developer. A contingency percentage of **ten percent (10%)** shall be applied to and included with the total.

(D) The escrow deposit may be cash, certificates of deposit, treasury bills, or other readily negotiable instruments approved by the City and made payable to the City.

(E) Surety shall have prior approval of the City.

(F) The initial term of any bond or escrow agreement shall not exceed **two (2) years.**

(G) The City will not release portions of escrow deposit or other guarantee coinciding with portions of the entire Improvement Plans before completion of all uncompleted portion of improvements and all required inspection fees are paid.

(H) The developer shall pay to the City all costs of inspection and testing except that required of the developer deemed necessary by the City as checks of the developer's testing that he undertakes. The City reserves the right to utilize authorized agents, including material testing companies, of their choice. Approvals of improvements will not be granted until receipt of said reimbursement.

(I) Sidewalks shall be constructed by the developer. Construction of these may be concurrent with construction of driveways in the event a Final Plat has been approved by the City and lots are sold.

(J) In the event all the improvements proposed on the Improvement Plans are not completed within the **two (2) year** period, the City may require the surety to perform on the bond and pay to the City that equal to the cost of the remaining improvements not completed, retain all escrowed funds required to complete the remaining improvements and platting and return unused amounts to the developer, or require the developer submit a new performance bond or escrow deposit equal the cost of the remaining improvements not completed.

(K) As noted in subsequent sections of Code, the Final Plat shall be submitted no later than **two (2) years** and **three (3) months** following approval of Improvement Plans. The **three (3) months** following required completion of construction within **two (2) years** is afforded in the event the developer does not want to post performance guarantees.

(L) In the event the developer does not complete improvements as described in (J), the developer will not be allowed to submit another Preliminary Plat for any tract within City jurisdiction for another **five (5) years**, approvals of the Preliminary Plat associated with the construction being undertaken shall be considered null and void, and the developer will not be allowed to submit subsequent Improvement Plans for other phases within the tract(s) of the approved Preliminary Plat for another **five (5) years** voiding the previous, approved Preliminary Plat process.

(M) Upon completion of all improvements the City will conduct a final inspection. Upon satisfactory completion, the developer shall present Record Documents to the City and an Affidavit stating that all contractors and suppliers have been paid and that the developer accepts responsibility for maintenance and repair of improvements, as deemed necessary by the City, for a period of **two (2) years** following acceptance by the City. The performance guaranty shall be reduced. At this time, the developer shall post a maintenance bond, or other security that is the same type as required for the performance guaranty, equal to the City's estimate of costs for all infrastructure and work covered by the Improvement Plans, including inspection and testing costs, and guaranteeing to the City the availability of said funds upon demand. In the event the developer does not carry out necessary repairs, the City shall have the right to utilize said funds to carry out necessary repairs as the City deems necessary. There may be more than **one (1)** final inspection in the event that only portions of infrastructure associated with the Final Plat are constructed.

(N) In the event the developer desires to begin another phase of developing the entire tract(s) of the approved Preliminary Plat, the initial step for review and approval of the next phase shall be submittal of Improvement Plans for said phase. Improvement Plans for the next phase and subsequent phases shall remain unchanged from those of the initial approved Improvement Plan submittals and shall depict constructed or improvements being constructed (record documents). Described submittals shall occur within **five (5) years** of approval of the initial Improvement Plans but must follow construction and Final Platting of the initial phase due to the need to construct detention systems first and avoid complications of constructed and planned features of work. Modifications to the initial Improvement Plans depicting changes to the Improvement Plans under construction cannot be made as this could complicate the performance guarantees in place. Said modifications can only be proposed and made following completion and final inspection of the Improvement Plans under construction.

34-4-5 **INSPECTION REQUIREMENTS.** The developer shall notify City Public Works personnel a minimum of **three (3) working days** prior to the initiation of all pertinent work items. The following outlines minimum inspection and testing requirements and responsibilities. The developer shall undertake and pay all costs for testing and documentation. The City reserves the right to require additional inspection and testing as they deem necessary and to charge the developer for these costs. The developer shall bear all costs of removal and repair of any portion of work that does not meet the requirements specified by this Code, and/or with grades and elevations that

deviate from Improvement Plans by amounts deemed unacceptable by the applicable specifications and by the City.

(A) **Inspection and Testing Guidelines.** All inspection and testing shall be in general accordance with the most current of the following:

(1) IDOT Standard Specifications for Road and Bridge Construction

(2) IDOT Supplemental Specifications and Recurring Special Provisions

(3) IDOT Construction Manual

(4) IDOT Project Procedures Guide

(5) Standard Specifications for Water and Sewer Main Construction in Illinois

(B) **Record Documents.** The developer shall be responsible for preparing record documents in electronic format. These shall be CAD drawings coinciding with the Improvement Plans for the phase being platted with the Final Plat and the Final Plat. In the event that only portions of infrastructure for the phase being platted via the Final Plat have been constructed and inspected, record documents shall reflect infrastructure constructed only. A second set of record documents reflecting the remaining infrastructure following its completion shall be submitted and these shall include previously submitted record document information. These CAD drawings shall clearly denote planned features and call outs and changes to these with strikethrough lines through planned features and callouts and added callouts denoting revised, installed values. The developer shall have their engineer undertaking staking for the Final Plat electronically field survey the elevations and positions of installed features following their installation. The following information shall be denoted on the record drawings, electronically:

(1) **Sanitary Sewers.**

(a) All sanitary sewer main alignment changes.

(b) Installed manhole top, influent, effluent, and bottom elevations for all manholes.

(c) Installed invert elevation of all sanitary sewer services at the easement line.

(d) Installed planar locations of all lift station wet well and valve vault corners at the ground surface and the elevation of these points. Control panel corners shall also be field surveyed for location.

(e) Installed elevations of all influent, effluent, base, and float elevations within lift station wet well and valve vaults.

(f) All sanitary sewer force main alignment changes.

(2) **Water Mains.**

(a) Installed planar locations of all water main alignments a minimum of **three hundred (300) feet** in tangent sections, a minimum of **fifty (50) feet** in curved sections, and at all valve, auxiliary hydrant valve,

hydrants and termini. Locating wire is required, however, general alignment differences from plan are required for mapping purposes.

(3) **Final Plat Information.**

(a) Proposed right-of-way, lot, easement, set-back lines; street centerlines and stationing, every **fifty (50) feet**; curve data; dimensions of all radii at intersections; width dimensions of all right-of-way and easements; all lot line and corner angles and direction thereof; all monumentation and placement of iron rods for lot corners; front, side and back lot line and outlot line lengths for all lots; all lot, outlot, and dedication areas other than rights-of-way and easements, in square feet; progressive numbering of all lots.

(C) **Sanitary Sewers.**

(1) The developer shall perform required deflection tests in accordance the Standard Specifications for Water and Sewer Main Construction and the IEPA's Recommended Standards for Sewerage Works and report any results to the City.

(2) The developer shall perform manhole testing in accordance with IEPA's Illinois Recommended Standards for Sewerage Work's referenced ASTM C1244-05. ASTM C969-94 will not be considered sufficient at the manholes. Vacuum testing shall include the frame.

(3) The developer shall perform ASTM C969-94, exfiltration of air, for mains between the manholes.

(4) All manhole and sanitary sewer testing shall be documented by a registered Professional Engineer in Illinois.

(D) **Lift Stations.**

(1) The developer shall have pump and electrical control supplier or manufacturer representatives present at start up of the lift station. Said representatives shall provide a written start-up report to the City.

(E) **Water Mains.**

(1) The full length of all water mains shall be pressure tested in accordance with the Standard Specifications for Water and Sewer Main Construction at an operating pressure equal to **2.5 times** the normal operating pressure at the lowest point of elevation in the line for a period of no less than **four (4) hours.**

(2) Leakage testing in accordance with the Standard Specifications shall also be performed.

(3) Disinfection of water mains in accordance with requirements of the Standard Specifications except that tablet disinfection will not be allowed.

(F) **Materials.** All materials used in the Improvements, including but not limited to, aggregate, lime, concrete, bituminous materials, concrete pipe, plastic pipe, steel, castings, seed, and other, shall be from a source approved by IDOT. All materials for water and sanitary sewer infrastructure shall also meet requirements of the IEPA. Documentation of the source of all materials shall be provided to the City a minimum of **two (2) weeks** prior to fabrication, installation, or construction. The City reserves the right to require the developer utilize a different source not meeting these requirements, at no cost to the City.

(G) **Embankment, Subgrade, and Base Testing.**

(1) The developer's geotechnical engineering company that prepared the Site Geotechnical Report shall perform all testing of embankment obtained from the site or hauled to the site, excavated areas, density/compaction of said material and areas, density/compaction of aggregate bases, lime modified areas, and all other associated work.

(2) The developer's geotechnical engineering company shall prescribe lime modification rates and recommend modifications as required.

(3) The testing frequencies prescribed in IDOT's Project Procedures Guide shall be modified as follows:

(a) **Standard Moisture Density Control Curve. One (1)** for each different earth or aggregate material utilized at the site.

(b) **Embankment Density. One (1) test** every **three hundred (300) feet** with a minimum of **one (1)** per each street, for each lift (maximum **eight (8) inch** lift, or less, as prescribed by the IDOT Standard Specifications).

(c) **Subgrade Density. One (1) test** every **three hundred (300) feet** with a minimum of **one (1)** per each street, both cut and fill areas, with or without lime modification.

(d) **Aggregate Base Course Gradation.** A gradation test may be required by the City. IDOT source documentation must be presented to the City.

(e) **Aggregate Base Course Density. One (1) test** every **three hundred (300) feet** with a minimum of **one (1)** per each street, for each lift. For Type B materials, compaction shall be **ninety-five percent (95%)** of standard lab density.

(F) **Concrete.**

(1) The developer must utilize a testing company experienced in IDOT reporting of results.

(2) The testing frequencies prescribed in IDOT's Project Procedures Guide shall be modified as follows:

(a) **Concrete Mixes.** An IDOT approved mix design for the source plant and material sources used in each mixture shall be utilized for all types of concrete. IDOT source and mix design documentation must be presented to the City prior to placement of materials.

(b) **Concrete Air - Pavement and Curbing. One (1)** air test every **three hundred (300) feet** with a minimum of **one (1)** at the beginning of each day's pour.

(c) **Concrete Slump - Pavement and Curbing. One (1)** slump test per **six hundred (600) feet** formed with a minimum of **one (1)** at the beginning of each day's pour.

(d) **Concrete Strength - Pavement and Curbing. Four (4) beams (eight (8) cylinders)** shall be made and tested for the first pour of the day for each concrete item and one half said amount for the first pour of each item, each day thereafter when pours are on consecutive days. When pours are discontinued for **one (1) day**, the **four (4) beams (eight (8) cylinders)** and subsequent schedule for first pours shall start over.

(G) **Bituminous Materials.**

(1) The developer must utilize a testing company experienced in IDOT reporting of results. For bituminous materials, plant personnel may be utilized.

(2) The testing frequencies prescribed in IDOT's Project Procedures Guide shall be modified as follows:

(a) **Bituminous Mixes.** An IDOT approved mix design for the source plant and material sources used in each mixture shall be utilized for all types of mixes. IDOT source and mix design documentation shall be presented to the City prior to placement of materials.

(b) **Aggregates, Voids, Mixture Gradation, Binder Content. One (1) test** per day shall be performed for each of these, each day of placement in the field, except for aggregates which shall be tested **one (1) time** for each week of placement in the field.

(c) **Density. One (1) test** per **three hundred (300) feet**, per lift, per lane, randomly located with a minimum of **two (2) tests** per mix, per day of operation.

(H) **Shop Drawings.** As a minimum, fabricators shall prepare shop drawings for the following. The developer's engineer shall review said shop drawings and stamp and sign these accordingly. These shall then be submitted to the City for review before fabrication can begin.

(1) **Structural.** Standard precast concrete box culverts, non-standard precast concrete box culverts, three-sided precast concrete culverts including footings, bridges as defined by IDOT, and other structures as defined by the City.

(2) **Electrical.** All electrical wiring schematics, wiring and components, including manufacturer equipment for lift or pump stations.

(3) **Water and Sanitary Sewer.** Pumps, valves, hydrants, manholes, and piping systems.

34-4-6 IMPROVEMENT PLAN REQUIREMENTS. The improvements shall be graphically depicted on **twenty-four (24) inch by thirty-six (36) inch** size prints titled Improvement Plans, and have the following minimum information shown:

(A) Title page, including notation similar to Improvement Plans for [name of subdivision or development], [addition number, if applicable], [phase number, if applicable], and the following:

(1) key map showing the relationship of the subdivision or development tract, including subsequent phases, to previous subdivisions and existing streets and highways, with a north arrow and scale;

(2) index of sheets;

(3) names and addresses of utility companies in the vicinity and contact persons;

(4) signature block for the developer's signature and date of signature (company president), with the following:
"I certify these Improvement Plans have been prepared in accordance with the City Subdivision Code, that I will construct improvements in accordance with said Code and approved Improvement Plans, and that I will remediate improvements that do not meet said Code and said Improvement Plans.
_____[signature]_____ Date _____";

(5) signature block for the developer's engineer(s) and date of signature(s) with the following, for each Professional Engineer, Structural Engineer, or other:
"Engineer of record for contract responsibility, and technical responsibility, for work presented on sheets _____ of _____:
_____[signature]_____ Date _____";

Registered Professional Engineer in Illinois
Registration #62-xxxxxx
Registration Expires: _____[Date]_____";

(6) signature block for the City's approval with the following:
"Approved:
_____[signature]_____ Date _____";

(B) Copy of the Preliminary Plat.

(C) Typical sections for various types of street improvements, including callouts of materials, and typical sections for proposed ditches;

(D) Existing topographical information and dimensioning in plan views equal to that required for the Preliminary Plat;

(E) Proposed features and dimensioning equal to that required for the Preliminary Plat, except as detailed further for the Improvement Plans;

(F) **Plan Views.** Plan views of all planar areas within the subdivision at a minimum horizontal scale of **one (1) inch** equal to **forty (40) feet.** These shall include, in addition to that required for the Preliminary Plat:

(1) Labeling, by use of legends and different line styles and symbols denoting different types and sizes, locations of:

(a) all sanitary sewer manholes, mains, force mains, lift stations, and service laterals;

(b) all water mains, valves, hydrant and valve assemblies, booster stations, and service connections;

(c) all storm drainage pipes, inlets, manholes, culverts, bridges, concrete swales, rip rap placements, ditches (direction of flow arrows), pump stations, sump lines, roof drains and tiles, footing tiles underground detention piping, detention/retention outlet structures, and Base Flood Elevations;

(d) all encasements of water main and sanitary sewers;

(e) location of all street and permanent traffic control signs;

(f) all building foot prints and parking areas.

(2) It is the prerogative of the engineer to list influent and effluent invert elevations and top closed lid elevations of manholes and/or inlets in plan view or profile view, however, these must be listed for all sanitary and storm sewers. With either depiction, the size and type of all manholes and/or inlets and other structures shall be indicated;

(3) Intersection details showing back of curb elevations and point elevations within the intersection pavement, at all joint locations for curb and concrete pavement, if concrete is utilized, at a minimum horizontal scale of **one (1) inch** equal **twenty (20) feet;**

(4) Intersection details showing treatments for ADA accessibility at curb and sidewalks and pavement markings for crosswalks, stop bars, and other required markings;

(5) Benchmarks and existing and proposed survey monuments;

(6) North arrows and scales.

(G) **Profile Views.** Profile views of the following shall be shown below plan views, or separately, at a minimum vertical scale of **one (1) inch** equal to **five (5) feet:**

(1) Vertical alignments at the centerline of streets, with existing profiles shown at the same location, including VPC's, VPI's, VPT's, low and high points, K values of curves, and slopes;

(2) Vertical alignments of all water mains, sanitary sewer mains, force mains, and pertinent storm sewers or other drainage structures. Pertinent storm sewers or other drainage structures shall mean those that cross water and sanitary sewer mains, and, for these the elevations of said mains shall be denoted;

(3) Sectional views of all outlets for detention/retention areas.

(H) **Erosion and Sediment Controls.** A sheet, or sheets, with: the Erosion & Sediment Control Plan (text); erosion control measures in plan view, utilizing IDOT symbols; and erosion control measure details, shall all be included in the Improvement Plans. The erosion control measures may be depicted on a plan view of the grading or individual plan sheets at the **one (1) inch** equal to **forty (40) feet** scale. Copies of IDOT Highways Standards pertaining to erosion control measures may be shown in the Improvement Plans.

(I) **Details and Specifications.** Graphical details and written specifications or references to documents governing construction, such as ASTM standards, for the following shall be included:

(1) Sanitary sewer manholes;

(2) Sanitary sewer service lateral connections, and mains, including force mains;

(3) Sanitary sewage lift stations, including a plan and sectional view of valve vaults (including air release valve vaults) and wet wells showing floats, steps, etc.;

(4) Sanitary sewer trenching detail sectional view;

(5) Water main valves, tapping sleeves and valves, and thrust blocking;

(6) Water main fire hydrant and auxiliary valve sectional view;

(7) Water main service connection detail sectional view, including meter pit details;

(8) Water main trenching detail sectional view;

(9) Encasement details for water mains and other features - sectional view;

(10) Storm sewer inlet, manhole, and grate details;

(11) Storm sewer pipe trenching detail sectional view;

(12) Culvert and/or bridge detail sheets including plan and sectional views (see IDOT Culvert and Bridge Manuals);
(13) Driveway, sidewalk, and curb details;
(14) Patching details, if applicable for utility crossings of existing streets;
(15) Pavement marking details;
(16) Sign and post details;
(17) Traffic control details, if applicable.

(J) **Grading Plan.** Plan view sheets at a minimum scale of **one (1) inch** equals **forty (40) feet** depicting existing contours and topography, proposed contours at **one-half (1/2) foot** intervals, and line work for all proposed features including clear designation of street centerlines and stationing.

(K) **Documentation.** In addition to the graphical Improvement Plans, the following separate documentation shall also be submitted to the City:

(1) Drainage calculations, signed and sealed by an Illinois Registered Professional Engineer, including, but not limited to:
(a) Cover sheet titled *"Drainage Calculations"* with the name of the subdivision or development;
(b) Table of Contents with each sheet numbered;
(c) Description of the project, including existing conditions, proposed features, methodology, and unique aspects;
(d) Map of existing drainage areas. Existing, upstream and downstream areas beyond survey limits may be depicted with other mapping, however, sufficient topographic detail must be shown on these, as deemed necessary by the City;
(e) Separate maps of existing drainage areas and proposed drainage areas;
(f) Runoff characteristics including runoff coefficients or curve numbers for each existing and proposed drainage area and time of concentration calculations, or other applicable hydrologic characteristics depending on the methodology utilized. These should also include time of travel for existing conduits or other channelized systems affecting the development, upstream and/or downstream;
(g) Gutter capacity calculations;
(h) Inlet capacity and bypass calculations;
(i) Conduit capacity and hydraulic grade line calculations;
(j) HEC-RAS calculations, if applicable, including a map showing sections and stationing, graphical printouts of existing and proposed sections, flow and boundary data, and tabular results clearly indicating stationing and water surfaces;
(k) Detention/retention storage calculations;

(l) Calculations of how Base Flood Elevations were determined.

(2) Structural design calculations required by IDOT references, signed and sealed by an Illinois Registered Structural Engineer. All Improvement Plan drawings with structural details including, but not limited to, non-standard precast box culverts, bridges as defined by IDOT, retaining walls greater than **four (4)** in height, and other structural features defined by the City, shall be signed and sealed by an Illinois Registered Structural Engineer.

(3) Illinois Environmental Protection Agency permit applications, signed and sealed by an Illinois Registered Professional Engineer.

(4) Water system hydraulic design calculations.

(5) Sanitary sewage lift station and force main design calculations.

(6) Estimate of Cost that lists each item of work and its associated unit price, preferable utilizing typical IDOT pay item nomenclature.

(7) Calculations of traffic volumes anticipated on proposed streets in subdivisions and improvements on existing streets abutting the subdivision. For developments, these calculations will be required at entry and exit points onto City streets. Said calculations shall be made for the year of construction and at **twenty (20) years** and shall be based on Municipal Standard Detail information and current IDOT methodologies, including reference to Institute of Transportation Engineers' Trip Generation manuals. A minimum **two percent (2%)** annually compounded growth rate shall be applied. Heavy vehicle percentages shall be provided along with final estimations of ADT's. This is minimum information, not to be confused with more involved traffic studies that may be required by the City.

(L) **Review Fees.** No fees are due from the developer to the City at the time of filing of the Improvement Plans. In the event that the City is required to review submitted Improvement Plans following a second review by the City, the developer shall pay a non-refundable fee in the amount of **Two Hundred Fifty Dollars ($250.00)** to the City at the time of submittal.

34-4-7 SPECIFIC DESIGN AND CONSTRUCTION REQUIREMENTS. In addition to submitting information required for the Improvement Plans (see **Improvement Plan Requirements**) and adhering to the Municipal Standard Details, the developer shall adhere to the following specific requirements in preparing

Improvement Plans. Said specific requirements shall be listed in the text of specifications on the Improvement Plans:

(A) **Earthwork and Grading.** IDOT Standard Specifications shall apply for all earth excavation, embankment, subgrade preparation, and grading. Note the following:

(1) Special consideration shall be given to the site Geotechnical Report, most notably topsoil and high plasticity clays.

(2) Grading Plan sheets shall show the minimum first floor elevations, as defined for drainage and not sanitary sewer service, for each lot. These minimum shall be established to meet freeboard requirements of this Code in relation to allowable and existing water surfaces, including those during the **one hundred (100) year** event.

(3) Grading Plan sheets shall include grading of required swales along the side lot lines;

(4) Lime modification shall be performed just prior to subsequent paving operations and a lime modified subgrade shall not be allowed to remain exposed for more than a period of **two (2) months**. Special permission must be obtained from the City to perform lime modification between **November 30th** and **May 1st**.

(B) **Temporary Erosion and Sediment Control.** No subdivision or development disturbing land of more than **five thousand (5,000) square feet**, shall be approved by the City without a written Erosion and Sediment Control Plan (text) and a graphical depiction of erosion control measures for the activity being undertaken. Both of the aforementioned shall be inserted as sheets in the Improvement Plans. The City is applying typical NPDES requirements for **one (1) acre** to said **five thousand (5,000) square feet** areas (minimum) and larger areas. The Erosion and Sediment Control Plan shall include example text described in the Municipal Standard Details, including the NPDES Permit Number and Certification by the developer's Engineer directly on the plans or utilize current IDOT verbiage directly on the plans as opposed to separate documents to facilitate review in the field.

The developer shall initiate and complete improvements such that the smallest increments of disturbed earth result. Temporary seeding and mulch shall be used in accordance with IDOT requirements. The IDOT Bureau of Design and Environment manual which references the Illinois Urban Manual, provides guidelines for number of temporary ditch checks, inlet and pipe protection, and other temporary erosion and sediment controls.

(C) **Sanitary Sewer Systems.** Sanitary sewer systems shall be installed prior to construction of streets. These systems shall meet the following requirements:

(1) Sanitary sewer mains, force mains, services, and appurtenances shall conform to the requirements of the Municipal Standard Details.

(2) All sanitary sewers and appurtenances shall be installed in accordance with the Standard Specifications for Water and Sewer Main Construction in Illinois, the IEPA's Recommended Standards for Sewage Works, the Illinois Plumbing Code, and manufacturer's requirements.

(3) Air release valves shall be installed at high points along the route of the sanitary sewer force mains.

(4) No. 12 gauge copper wire shall be installed **one (1) foot** above the entire length of force main installations to facilitate future locating. Wire shall be carried up to the ground surface at appurtenances.

(5) Backfilling for mains, service laterals, and force mains shall be per details shown in the Municipal Standard Details. All overdig surrounding manholes where the topmost overdig limits are within **two (2) feet** of pavement, curb, driveways, and sidewalk shall be backfilled and compacted with the same gradation aggregate shown on the Municipal Standard Details.

(6) Service laterals shall not be placed under drainage structures and other planned utility appurtenances.

(D) **Potable Water Systems.** Water main systems shall be installed prior to construction of streets. These systems shall meet the following requirements:

(1) Water mains and services shall conform to requirements of the Municipal Standard Details.

(2) All water distribution lines and appurtenances shall be installed in accordance with the Standard Specifications for Water Main and Sewer Main Construction in Illinois, IEPA Requirements, the Illinois Plumbing Code, and manufacturer's requirements.

(3) All water distribution lines shall be of a minimum diameter shown on the Municipal Standard Details. Polyvinyl chloride (PVC) pipe shall be used.

(4) Ductile iron pipe (DIP) may be used in lieu of PVC only when PVC cannot be utilized. DIP shall be in accordance with AWWA C151, Class 53 requirements. It shall be tar (seal; asphaltic) coated and cement lined. Push on joints shall conform to ASTM F477, pressure-rated per ASTM D3139.

(5) All PVC lines shall have No. 12 copper wire placed **one (1) foot** above the pipe, connected on all the outside of all valve boxes to the final surface, flanges of hydrants, and other appurtenances.

(6) Backfilling for mains, hydrants, and services shall be per details shown in the Municipal Standard Details.

(E) **Drainage Systems.** All drainage systems for accommodating and conveying storm water runoff and sump pump discharges, shall be designed, constructed, and fabricated in accordance with the referenced IDOT manuals and standards, the

Municipal Standard Details, Code requirements, and modifications to IDOT requirements outlined by Code.

Design requirements for drainage systems shall adhere to the IDOT Drainage Manual and Appendix, other IDOT references, Code requirements, and modifications to IDOT requirements outlined by Code. More specific design requirements are described as follows:

(1) **Establishing Drainage Areas, Surface Characteristics and Conditions.** Grading plans shall correspond to the drainage areas prepared in the report. Each drainage area shall have its own hydrologic and hydraulic calculations. Generally:

(a) **Residential, Single and Multi-Family.**

(i) In a residential subdivision or area, either single family or multi-family (duplexes, condos, or villas), excepting apartment complexes, each lot's primary drainage area shall be planned to drain towards the street, divided such that estimated roof peak defines the innermost edge of a trapezoidally shaped drainage area. Streetside corners of the trapezoidally shaped area shall terminate at the lot's property lines.

(ii) In any type subdivision or development, side and back lot line swales and ditches shall be shown on the grading plans in the Improvement Plans with proposed contours. Grading shall be such that runoff of any individual lot or tract is directed away from adjoining properties (see also side lot line easement requirements in other sections of this Code).

(iii) Side lot line swales and ditches shall generally be directed away from street curbs and inlets. In the event this is not possible, the maximum allowable surface runoff discharge into the street shall be no greater than what can be accommodated by the gutter and curb inlets that serve streetside areas meeting gutter encroachment criteria.

(iv) In the event side lot line swales and ditches are directed towards streets and the maximum allowable discharges noted above are exceeded, storm sewer piping and inlets of appropriate size and spacing (at that point in the street) shall be added the entire length of said lot line. Said piping shall be connected to piping along the street and shall terminate at the back lot line

with either an inlet, end section, or junction (all junctions are required to be inlets) with contiguous piping system. Inlets at the back of sidewalk that have openings towards the side lot lines will not be allowed.

(v) All surface discharges directed away from streets down side lot lines shall be in underground conduit the entire length of the side lot line with an inlet at the upper end (near the street) as a cleanout, if said discharges exceed **three (3) cfs** during a **ten (10) year** event. All discharges from the drainage areas including street pavement, regardless of magnitude, shall be in underground conduit down side and back lot lines.

(vi) For back lot lines and back lot areas, when surface runoff discharges exceed **five (5) cfs** of flow or **three (3) fps** velocity during a **ten (10) year** event, storm sewer piping and inlets of appropriate size and spacing shall be added at the back lot lines from the point of said discharge until said discharge enters into detention/retention or other piping system.

(vii) For back lot lines and areas, all incoming discharges in piping from side lot lines or other areas shall remain in piping down the back lot line until discharge enters into detention/ retention or other piping system.

(viii) For calculating runoff coefficients or curve numbers, each single family lot shall have a minimum roof area of **three thousand (3,000) square feet** and a minimum driveway area of **six hundred (600) square feet** contributing to impervious area. Each multi-family lot's runoff characteristics shall be determined on a case-by-case basis, with impervious area not less than that for each single family lot.

(ix) Each single family lot's proposed impervious area runoff coefficient shall be **0.90** and the pervious area runoff coefficient shall be **0.30** using the Rational method. With the SCS TR55 or TR20 methods, curve numbers comparable to those of the Rational Method shall be utilized. The proposed impervious area curve number

shall be 98 and the proposed pervious area curve number shall be for good condition grass cover and the applicable hydrologic soil groups: 39 for hydrologic soil group A, 61 for group B, 74 for group C, and 80 for group D.

(b) **Residential, Apartment Complexes.** The impervious areas for each apartment complex with off-street parking shall include the planned rooftop area and parking areas, determined on a case-by-case basis. Impervious area shall not be less than that for each single family lot and runoff coefficients and curve numbers shall be comparable to those for single family.

(c) **Commercial or Industrial Development.** When individual lots of a subdivision are being developed as commercial or industrial tracts, or when such tracts are being developed as a separate development other than a subdivision, with or without large impervious areas such as rooftops and parking areas, the drainage areas within the tract(s) shall be established on a case by case basis with the following requirements:

(i) Rooftop areas to gutters and roof drains shall be defined and shown on the drainage maps when the building(s) have previously been designed or are being designed. Each roof drain shall have its own separate drainage area.

(ii) Each inlet and piping intake, such as a flared end section, shall have its own separate drainage area.

(iii) The entire proposed industrial or commercial area, except for low-lying areas near existing or proposed drainageways that will never have parking lots or structures, shall have a runoff coefficient of **0.90** using the Rational method and comparable curve number of 98 with the SCS method.

(d) **Drainage Area Conditions Beyond Tract.** Determination of drainage areas and characteristics both upstream and downstream of the tract being developed shall be as follows:

(i) The complete limits of all drainage areas affecting the subdivision or development, upstream and downstream, shall be determined and shown on drainage area maps including more complex urbanized areas with storm sewers.

(ii) When the upstream drainage areas adjoin an existing road or street that must be improved with widening, curbing, storm sewers, and larger storm water conduits, as determined necessary by the City, as it abuts the boundary of the subdivision or development in question, these drainage areas shall be configured equal to the detail required for those within the subdivision or development being designed with sub-areas for street inlets and intakes from larger sub-areas adjoining right-of-way. Future improvements along said road or street beyond the platted boundaries shall be accounted for at the same level of detail. This may require estimations of the locations of future curbing, inlets, and storm sewers. All bypass from inlets within these areas shall be accounted for and all conduit and drainageways shall be integrated with those for the new subdivision or development such that hydraulic grade lines and flows are evaluated with the new subdivision or development.

(iii) For all other upstream areas, the maximum size of any drainage sub-area shall be **fifteen (15) acres** for any area that is urbanized or in the process of becoming urbanized as deemed such by the City. For these areas, representative, composite runoff coefficients or curve numbers shall be calculated. For those with storm sewer systems, short times of concentration shall be utilized. For urbanizing areas, runoff coefficients or curve numbers for comparable land usage shall be applied, as well as short times of concentration in anticipation of future storm sewer systems.

(iv) In situations where the upstream drainage areas pass through bridges or culverts, these structures shall be ignored as these could be upgraded in the future. Similarly, upstream ponds, lakes, and detention systems attenuation shall be ignored.

(v) Drainageways and conduit systems passing into or through a proposed subdivision or development, and those downstream, shall be modeled as flowing at or above capacity

regardless of the storm events being applied within the proposed subdivision or development. The maximum size of any drainage sub-area shall be **fifteen (15) acres** and runoff characteristics shall be as for the upstream areas.

(vi) All existing constrictions on drainageways and conduit systems downstream of the proposed subdivision or development shall be modeled to remain in place in establishing proposed drainage conditions of outfalls, lot elevations, created head of new structures (and associated freeboard), and similar feature. It is noted that this approach conflicts with establishing jurisdictional drainageways' water surface elevations and thus would require separate calculations beyond those required for establishing jurisdictional drainageways' water surface elevations.

(e) **Runoff Coefficients and Curve Numbers.** The pre- and post-development runoff coefficients for agricultural ground including but not limited to, pasture and row crop ground, and other areas with grass or woodland cover shall be **0.30** (grass cover), using the Rational Method. The coefficients for gravel areas shall be **0.90** and those for all impervious surfaces including but not limited to roofs, driveways, patios, and paved areas (either asphalt or concrete) shall be **0.90**. With the SCS TR55 or TR20 methods, curve numbers comparable to those of the Rational Method shall be utilized. Curve number values of 98 shall be used for areas with Rational Method runoff coefficients of **0.90**, as prescribed herein. For agricultural ground described, the following curve numbers shall be used: 39 for hydrologic soil group A, 61 for group B, 74 for group C, and 80 for group D.

(f) **Sheet Flow.** Sheet, or overland flow, as defined by various hydrologic methods shall be limited to **three hundred (300) feet**.

(g) **Sag Areas.** At sag inlets along streets there shall be separate drainage sub-areas delineated either side of said inlets for checking allowable gutter encroachment.

(2) **Hydrology.** The hydrologic methods considered applicable for particular size drainage areas as noted in the IDOT Drainage Manual shall be utilized. The Rational Method shall

not be used for sizing bridges, culverts, and other conduits intercepting runoff from municipal-jurisdictional areas and areas larger than municipal-jurisdictional areas. When a contributing drainage area to a drainage structure warrants use of what will be described as more intensive hydrologic methods such as the SCS TR-20 or TR-55, the USACoE's HEC-1 (HEC-HMS), or the USGS Regression Equations (most current), the designer has two options for tailwater inputs for smaller systems within or adjoining the subdivision or development that do not require the more intensive hydrologic methods: (1) use the water surfaces generated by the more intensive methods in sizing described smaller systems at appropriate storm frequencies, or, (2) re-calculate the runoff that warrants use of the more intensive hydrologic methods using less intensive methods such as the Rational Method and use these resulting water surfaces in sizing described smaller systems at appropriate storm frequencies. Note that the aforementioned option (2) shall not cause the design of structures or conduits requiring the more intensive hydrologic methods to be based on the less intensive methods.

With use of TR-20 methodology, which is encouraged as it facilitates estimation of detention/retention requirements and can be used for both smaller areas within the subdivision or development as well as those requiring created head calculations, the ISWS's Circular 172 and Bulletin 70 data shall be utilized. The critical duration of storm shall be determined with trial runs, for a representative drainage sub-area within the new subdivision or development and this duration may be used for other similar sub-areas within the new subdivision or development. For areas beyond the new subdivision or development, unless these are similar to those within the new subdivision or development, separate trial runs for determination of the critical duration shall be made.

(3) **Storm Frequencies and Allowable Water Surfaces.** Storm event frequencies from the IDOT Drainage Manual shall be applied as follows:

(a) Existing and proposed ditches shall be designed for the **fifty (50) year** event such that flows do not exceed defined banks. The exception is that existing and proposed ditches draining municipal-jurisdictional areas larger areas and those intercepting commercial, industrial, or multi-family area discharges shall be designed for the 100 year event such that flows do not exceed defined banks. Ditches and swales, other than

for those draining municipal-jurisdictional areas and larger areas shall be designed such that the depth of flow does not exceed **nine (9) inches** at said **fifty (50) year** events. Ditches and swales at boundaries where off-site sheet flow is intercepted and channelized shall be designed such that there is no increased water surface depth at any point beyond the boundary for any storm event.

(b) Proposed ditches and swales at boundaries shall direct intercepted runoff to culverts or storm sewer systems. These cannot be directed towards proposed pavement and pavement inlets near the boundaries.

(c) Culverts that do not intercept jurisdictional and municipal-jurisdictional area runoff shall be designed for capacity for the **fifty (50) year** event. Note definitions of culverts: continuous conduit systems devoid of an inlet at the upstream end. This includes the entire downstream storm sewer system that may be connected at the downstream end of the culvert.

(d) Culverts or other structures such as bridges intercepting runoff from municipal-jurisdictional areas shall be designed for a **one hundred (100) year** event capacity such that allowable created headwater requirements are met for the same event; i.e. the increased water surface at the upstream face must be **0.50 feet** or less above the natural water surface and such that there is no more than a **0.10 foot** increase in the natural water surface elevation **one thousand (1,000) feet** upstream of the upstream face. Additionally, the allowable freeboard from design headwater to edges of pavement in the vicinity of the culvert shall be a minimum of **two (2) feet** and this shall be based not on natural conditions downstream, but existing conditions - with existing downstream culverts and other structures in place. Proposed structures shall be considered existing in calculating allowable freeboard. Freeboard requirements shall be required for any structure, regardless of its position in relation to the subdivision boundary due to storage considerations, unless comprehensive unsteady flow time effects are being modeled and compared for within the entire subdivision and incoming flows. No flood easements shall be obtained to effect these requirements.

(e) Culverts or other structures draining municipal-jurisdictional areas coincident with jurisdictional floodplains shall have **0.0** created head.

(f) Gutter capacities, inlet spacing determinations, inlet capacities, and storm sewer piping systems shall be designed for the **ten (10) year** event. IDOT Drainage Manual requirements for storm sewer systems draining sag locations in pavement to be designed for **fifty (50) year** events shall not be required except for roadways requiring review by IDOT. Allowable encroachment, measured from the joint of edge-of-pavement and the street-side edge of curbing into the pavement shall be **5.2 feet**, except as follows:

(i) Alleys: **two (2) feet.**

(ii) Business or Industrial: **four (4) feet.**

(g) Bridge and culvert hydraulic grade lines (HGL's) shall be calculated for the **ten (10)** and **one hundred (100) year** events, minimum. Storm sewer HGL's shall be calculated for the **ten (10)** and **one hundred (100) year** events, minimum. HGL's shall remain **one (1) foot** below tops of inlets at the applicable design frequency. Checking the **one hundred (100) year** event is primarily intended for evaluating whether inhabitable shelters are adequately above **one hundred (100) year** water surfaces but it is also required indirectly for design of detention systems. When HGL's for the **one hundred (100) year** exceed inlet tops and increases in pipe sizes cannot be made to lower HGL's, the water surface occurring at these inlet locations on the surface shall be analyzed in greater detail by calculating surface depths in the contributing swale, ditch, topography, and gutter area. Inlet capacity calculations may or may not address the aforementioned calculations in that the adjoining topography may not have been included in the inlet capacity calculations previously.

(h) Inlets other than those in pavements shall be designed such that depth of flow at the surface does not exceed **nine (9) inches.**

(i) Detention or retention facilities shall be designed to attenuate discharges from them for the **ten (10)** and **one hundred (100) year** events.

(4) **Hydraulics.** The hydraulic methods considered applicable for particular size areas, as noted in the IDOT Drainage Manual, shall be utilized, except for the following requirements:

(a) Hydraulic grade lines (HGL's) for all ditches, channels, and conduits draining jurisdictional, municipal-jurisdictional, and larger areas shall be calculated utilizing USACoE's computer software HEC-RAS, or equivalent. In the event unsteady flows are analyzed with this software, such that higher frequency events are analyzed coincident with those for other smaller conduit and ditch systems that enter these larger ditches, channels, and conduit, throughout the development (e.g. **10 year**), then HGL's for said smaller conduit and ditch systems can be based on the higher frequency water surfaces, otherwise, the smaller systems hydraulics shall be based on the **one hundred (100) year** water surfaces of said jurisdictional and municipal-jurisdictional systems, i.e. **one hundred (100) year** tailwaters input for said smaller systems.

(b) As noted in previous sections of this Code, the most conservative interpretations will be made for existing and future backwater effects downstream and upstream and determinations generating the highest water surfaces occurring in the subdivision or development shall be used.

(c) HGL's for all other conduits other than those for jurisdiction and municipal-jurisdictional areas shall be calculated using gravity and not pressure flow to meet freeboard requirements.

(d) Computer software functioning primarily to generate hydrographs but with some hydraulic capabilities such as routing through conduits, detention, etc., may be utilized to address time effects throughout systems, however, it shall not be used for calculation of continuous HGL's throughout proposed and existing drainage systems unless it can fully link individual components of the systems such that the user does not need to manually input tailwater elevations for each component.

(e) The minimum slopes for all conduits except for sump sewers shall be **0.30%.** Sump sewers shall have minimum slopes of **0.50%.**

(f) Gutter encroachment and capacities for all sections of pavement shall be calculated and these shall be in accordance with IDOT requirements.

(g) Inlet capacities shall be calculated for all inlets and these shall be in accordance with IDOT requirements.

Weir flow, or not orifice flow, shall be the basis for determining inlet capacities.

(5) **Placement, Appurtenances, Materials, and Backfilling.** The following pertain to systems the City will have maintenance responsibility for, including connections to said systems within easement and right-of-way.

(a) **Placement.**

(i) Clean out structures such as manholes with a minimum of **four (4) foot** inner diameter or larger area shall be placed a minimum of **three hundred (300) feet** apart along all buried conduits, including box culverts, except for sump sewers. These shall also be installed where there is a change in pipe size, a change in alignment, and at a vertical drop of more than **two (2) feet.**

(ii) The upstream ends of sump sewers not connected to non-sump sewer conduits shall have a clean out structure that has a minimum **two (2) foot** inner diameter (inlet) with a closed lid on top. A similar type cleanout structure shall be placed a minimum of **three hundred (300) feet** along the length of all sump sewers. It is recommended that similar type cleanout structures be placed at all locations where the private sump lines tap the sump sewers.

(iii) The minimum inlet spacing for commercial and industrial areas along dedicated streets, one side, shall be **three hundred (300) feet,** anticipating changes in developments.

(iv) Curb opening inlets with no flag grates shall not be used at non-sag locations.

(v) A minimum of **two (2) grate inlets,** if utilized, will be repaired at sag locations. These may be connected with conduit under curb but this distance shall not exceed **fifteen (15) feet.**

(vi) No grates shall extend into pavement, beyond curbing, unless it is shown that other type inlets cannot be utilized.

(vii) Drainage conduits paralleling streets shall not run under pavement and shall be beyond the back of curb.

(viii) Pavement inlets connecting to main conduits beyond the back of curb shall not require

manholes for connection at the main conduits if the connecting run of conduit is less than **four (4) feet**. A tee in the main may be utilized. **Two (2) sag inlets** can be connected with a single conduit run to the main utilizing a tee.

(ix) Dual and multiple pipe culvert runs are allowed, however, to improve hydraulics, the influents or effluents of these shall be tied with a cast-in-place concrete headwalls rather than flared end sections (see Appurtenances).

(x) The minimum bury depth for sump sewers shall be **two (2) feet** to the top of the pipe.

(b) **Appurtenances.**

(i) All storm sewer appurtenances or structures such as inlets and manholes maintained by the City shall be cast-in-place, concrete masonry, or precast concrete. Other type materials will not be accepted. These shall be designed and constructed in accordance with IDOT requirements where applicable, otherwise in accordance with ASTM C478 or C913.

(ii) All detention facility appurtenances shall be cast-in-place or precast concrete.

(iii) All manholes and all inlets with flat concrete slabs shall have access frames and lids. These shall not be constructed of concrete.

(iv) All structures larger than **two (2) foot** inner diameter at the base shall have standard IDOT steps cast/formed into the walls for access.

(v) Grated inlets shall be pedestrian safe in areas having pedestrian access.

(vi) Trench grates shall be cast-in-place.

(vii) Standard IDOT inlet types and grates shall be utilized to facilitate future maintenance by the City. All grated inlets shall be pedestrian safe. The City reserves the right to require specific inlet and grate types through Municipal Standard Details.

(viii) Precast reinforced concrete flared end sections and poured toewalls are required at all single pipe inlets and outlets, at a minimum. Connections to non-reinforced concrete pipe, as needed, shall require cast concrete collars positioned a minimum of **eight (8) feet** back from the flared end section. Pipe between the

flared end section and the collar shall be IDOT Class A (concrete) pipe.

(ix) Cast-in-place, reinforced concrete headwalls per IDOT standards, or specially designed with a structural engineer's signed and sealed drawings, are required for all dual or multiple pipe culvert runs.

(x) All roof, foundation, and sump lines owned by the property owner shall be connected to concrete conduits with non-shrink gout and made water tight and to sump sewers with SDR 35 fittings that are watertight. All fittings shall be approved by the City before installation.

(c) **Conduit Materials.**

(i) Corrugated metal pipe systems including culverts shall not be utilized for bridges, culverts, conduits, and structures.

(ii) IDOT Class A storm sewer pipe shall be utilized for all storm sewers, culverts, and outlet structures in detention or retention facilities when circular conduits are hydraulically adequate.

(iii) All circular conduits other than sump sewers shall have an inside diameter equal to or greater than **twelve (12) inches**. All sump sewers shall have an inside diameter equal to or greater than **six (6) inches**.

(iv) Sump sewer pipe shall be SDR 35 meeting ASTM D-3034 requirements with Class 12454-B cell classification as required by ASTM D-1784. All push on or mechanical joints shall have rubber (SBR) gaskets meeting ASTM D-3212.

(v) All conduits shall increase in inner area as a system progresses in a downward sloping direction regardless of hydraulic calculations.

(vi) Soil conditions may preclude the use of precast concrete box, culverts, in accordance with IDOT requirements and the geotechnical investigation.

(d) **Backfilling.**

(i) When trench limits of undisturbed soils extend within **two (2) feet** of the back of curb, or the building edge of sidewalk, final backfill of the type shown on the Municipal Standard Details shall be utilized.

(ii) All overdig areas regardless of their limits, around appurtenances positioned as noted in (i) above shall be backfilled in similar fashion.

(iii) All non-Class A pipe regardless of its location shall have aggregate bedding, haunching, and initial backfill a minimum of **one (1) foot** above the top of the pipe within easement and right-of-way.

(6) **Detention and Retention Facilities.** In addition to the planning requirements of this Code, more specific requirements are as follows. These shall apply to both existing facilities that will be utilized as retention or detention that were not utilized as such prior to subdivision and proposed facilities. Design of these facilities shall follow requirements herein and those of State agencies governing such, whichever is more restrictive. Features required for detention and retention facilities are applicable to either, unless noted otherwise. Geometric requirements generally only pertain to subdivision development and not development of single tracts.

(a) **Retention and Detention Facilities.**

(i) Facilities shall be designed such that there is no increase in velocity and flow from pre-development conditions at the point or points of discharge at boundaries of the tract for the detention facilities. This is for all storm events between the **two (2) year** and **one hundred (100) year** events. Drainage calculations shall also show conditions for the **ten (10) year** and **fifty (50) year** events. Outletting of these intermediate events via appurtenances at the detention outlet structures is not strictly required but is recommended.

(ii) Pre-development times of concentration shall be longer than post-development times of concentration for conversions of sheet and shallow concentrated type surface flows into those of shallow concentrated type in gutters. Post-development times of concentration through major storm sewer piping runs shall be utilized in calculating post-flows.

(iii) Tailwaters downstream shall be calculated and utilized in determining the capacity of the existing or proposed facility.

(iv) The **one hundred (100) year** water surface, that occurring above normal pool, shall be contained within an area designated for the facility and shall not extend into buildable lot areas.

(v) A minimum freeboard of **three (3) feet** is required above the **one hundred (100) year** water surface for tops of embankment.

(vi) Banks shall not be greater than **3:1** near the high water areas and extending down into basins, except for retention facilities.

(vii) A **three percent (3%)** sloped earthen plateau shall be provided around the entire perimeter of the **one hundred (100) year** high water elevation, **three (3) feet** beyond side slopes required, a minimum of **twelve (12) feet** wide to afford vehicular access, except in areas with paved accessways as prescribed in other sections of this Code. These plateaus shall extend across any embankment acting as impoundment for the facility.

(viii) All facilities of the open basin type shall have a defined emergency overflow area that shall be designed as a concrete spillway and/or walls with adequate protection against scour and frost heave. It shall be designed and detailed on the plans with said signed and sealed by a licensed structural engineer in Illinois.

(ix) All perimeters of spillways, pipe intakes, standpipe structures, weirs, and other structures shall have rip rap placed alongside. Riprap shall extend fully into the lowest point of the basins either side of any embankment and to points beyond embankment where velocities are dissipated. The City reserves the right to modify proposed rip rap placement proposed on a case-by-case basis.

(x) A **twenty (20) foot** minimum setback shall be required from all property lines to the detention outlet structures and/or toe of embankment at the outfall of the facility.

(b) **Retention Facilities.**

(i) Existing ponds or lakes that are in the path of an existing ditch, stream, jurisdictional and municipal-jurisdictional drainageways, or base

flood areas shall be improved to maintain existing normal pool elevations with no increase to said elevations due to increased discharge. Enlarging these with additional excavation will be required.

(ii) Facilities shall be designed as detention facilities with no allowances for percolation due to the soils within the jurisdiction of this Code.

(iii) Normal pool elevation shall be considered the bottom for detention calculations.

(iv) Facilities shall be designed to retain water to the normal pool elevation. The geotechnical report required for the development or subdivision shall also evaluate the need for basin liners to maintain said elevation.

(v) The geotechnical report required for the development or subdivision shall also evaluate the feasibility of expanding existing impoundment with elevation of earthen embankments if so required. Placement of earth on top of existing embankment will not be allowed without adequate preparation and integration with the underlying, existing embankment.

(vi) Due to their nature, these facilities may or may not be modified to discharge at higher frequency events with the use of weirs, orifices, pipes, and other outlet structures. In the event that these are not modified with such, considering the need to retain storage capacity above normal pool discounting any percolation, a system of graduated spillways designed to discharge no more than the required storm events are considered the minimum modifications required.

(vii) Facilities shall be a minimum of **four (4) feet** in depth under normal pool, unless fish habitats are desired, for which the minimum depth of **eight (8) feet** shall be required for a minimum of **twenty-five percent (25%)** of the bottom area to afford winter habitat.

(viii) For basins **eight (8) feet** in depth, **2:1** side slopes around the areas that are **eight (8) feet** deep will be required.

(ix) Shoreline stabilization shall be required around all facilities. This shall extend to a depth of **one (1) foot** below the normal pool elevation and to an elevation of **one (1) foot** above the normal pool elevation measured vertically. Riprap, cast-in-place or modular concrete block retaining walls are acceptable. When walls are utilized, their maximum height is limited to **four (4) feet**. Other methods shall be reviewed by the City for approval.

(x) An outlet structure shall be designed and installed for dewatering of the pond for maintenance. Gravity dewatering mechanisms are preferred. These shall be designed and constructed with materials approved by the City on a case-by-case basis.

(c) **Detention Facilities.**

(i) The minimum size of any outlet structure pipe shall be **twelve (12) inches**. Galvanized or stainless steel orifice plates may be utilized for small development sites and subdivisions on upstream inflow pipes. These shall be adjustable with corrosion protected systems such that no cutting or disruption of the installation is necessary to make any adjustments. These shall be constructed so that they are accessible and so there is working room to perform adjustments if needed on the outside of the structure.

(ii) Standpipe outlet structures, box structures within embankment with pipe and weir systems on the wet side of embankment and any other structures shall be constructed of material required by this Code.

(iii) A low flow channel shall be provided that is not less than a **0.40%** slope. Said channel shall have a minimum **two (2) foot** wide, **eight (8) inches** thick concrete gutter constructed of the same mix for curb utilized in the IDOT Standard Specifications.

(F) **Streets, Sidewalks, Driveways, Signs, Paint Markings, and Signals.** All streets, sidewalks, driveways, and signs shall be designed in accordance with applicable design references, planning sections of this Code, Municipal Standard Details, and as modified herein:

(1) All construction methods and materials required for construction of infrastructure within what will be publicly-owned right-of-way and easement shall be in accordance with the IDOT Standard Specifications and all other applicable references. This includes sidewalks and driveway pavements.

(2) Regardless of the traffic factors prescribing utilization of dowelled, transverse contraction joints of the current IDOT pavement design methodology for concrete pavements, all business and industrial developments pavements shall require such.

(3) ADA detectable warning areas per Municipal Standard Details shall be constructed by utilization of pre-stressed cementitious panels that are cast in a formed recess in the wet concrete. These shall be of a type approved by IDOT. Other systems will not be considered acceptable.

(4) Curbing adjoining bituminous pavements shall be sawn and sealed every **fifteen (15) feet** as opposed to **twenty (20) feet** in IDOT references.

(5) All signalization design and signal equipment required for signalization or modifications to existing signals shall be in accordance with the most current requirements of the IDOT district with jurisdiction over the City.

(G) **Electrical Power, Telephone, Cable Antenna Television (CATV), and Other Utilities.** As noted in the planning sections of this Code, the City reserves the right to require realignment vertically and/or horizontally of any or all proposed infrastructure presented at the time of Improvement Plan review to avoid conflicts with necessary utilities insofar as said realignments do not require significant changes to proposed right-of-way and street alignments previously approved.

ARTICLE V - FINAL PLAT

34-5-1 DEFINITION AND PURPOSE. A Final Plat must be prepared, submitted to, and approved by the City before the County records any subdivision of land as defined in this Code and before any sale of property within the tract, or tracts, of the Final Plat. Final Plats are graphical, public documents that convey parcels of land such as right-of-way, easements, and other public lands to the municipality, document divisions of private land in the form of lots, insure all private land has access to public right-of-way and public utilities, insure zoning requirements are met, and insure intended land use is followed, or, create the vacation of previous platting. The City shall not review and approve any Final Plat until the Preliminary Plat and Improvement Plan submittals and reviews have been completed and the Improvement Plans have been approved by the City.

34-5-2 PREPARATION. The developer shall review applicable Code, ordinances, zoning, Comprehensive Plan, and regulations. Requirements for proceeding with filing of a Final Plat before the construction of improvements shown on approved Improvement Plans is complete shall be met. The City will not consider review of Final Plats until bonds are posted and other stated requirements are satisfied. The City shall not approve any Final Plat until it complies with requirements of this Code. The City shall not consider or approve any Final Plat until all improvements within the phase of the Improvement Plans being considered have been completed and inspected by the City; or the developer has provided the City with a performance bond or an escrow deposit equal to the City's estimate of the cost, not the developer's, of completing the uncompleted portion of improvements and all required inspection fees as outlined in other sections of this Code.

Preliminary Plat and Improvement Plan information approved by the City shall not be changed by the City or by the developer. Final Plats must be submitted and approved within **two (2) years** and **three (3) months** of Improvement Plan approval, coinciding with the allotted time for construction of improvements. In the event improvements have not been completed, the surety company shall be called upon to complete Final Plat preparation for recording.

34-5-3 SUBMITTAL, REVIEW AND APPROVAL. The developer and his land surveyor shall prepare and submit **three (3) copies** of the Final Plat and Estimate of Cost of remaining improvements not completed, the latter being subject to amendment just prior to final review considering ongoing construction; subdivision covenants and restrictions; and required review fees to the City's Public Works personnel. Following a period of **fourteen (14) days** for review, said personnel will provide the developer and the Mayor and City Council a written letter of comments. The developer will then have a period of **fourteen (14) days** to respond to comments by the City Public Works

Department personnel in writing, with a revised Final Plat and/or other related documents requiring revision, as required. The City Public Works Department personnel will then review again within a period of **fourteen (14) days** and respond in writing to the same persons, either requesting changes or recommending approval by the City Council. In the event changes are required, the same period of **fourteen (14) days** and **fourteen (14) days** of response and review will continue until the City Public Works personnel are satisfied the Improvement Plans are adequate for submittal to the City Council.

The City Council shall receive the approval of the City Public Works personnel and will have **fourteen (14) days** to approve the Final Plat and other associated submittals. In the event the City Council does not approve the Final Plat, the developer will have an indefinite period of time to resubmit to the City Public Works Department personnel and then the process described above starts over, however, a re-submittal of the Final Plat based on a preceding approval of the Improvement Plans will only be allowed within the **two (2) years** and **three (3) months** after approval of the Improvement Plans after which time the submittal and review process must begin again for the Final Plat.

Additionally, the City reserves the right to extend developer response and City review times noted herein in the event that additional information is required by the City.

All required copies of the City approved and signed Final Plat and supporting data such as covenants and restrictions shall be filed with County Recorder of Deeds.

Final Plat submittals associated with other phases within the same tract or tracts associated with the approved Preliminary Plat shall follow the review and approval process and schedules for Improvement Plans as noted in other sections of this Code.

34-5-4 ADMINISTRATIVE REQUIREMENTS FOLLOWING APPROVAL AND FILING. The following outlines administrative requirements following approval of the Improvement Plans and Final Plat and filing of the Final plat with the County:

(A) The developer shall provide the City with **four (4) copies** of the Final Plat and covenants and restrictions for City records following filing.

(B) The City will not approve any building or occupancy permit within the tract(s) of the Final Plat until the Final Plat is approved, the City receives required, recorded copies of the Final Plat, and the City receives record documents for all infrastructure associated with the Final Plat. When the Final Plat is recorded prior to completion of improvements such that monumentation and lot staking cannot be completed until after said completion, the City will not approve any building or occupancy permit within the tract(s) until the City receives a copy of a filed affidavit with the County Recorder of Deeds from the subdividing surveyor certifying that monumentation and lot staking has been completed, in accordance with State law. Note that State law requires for monumentation and lot staking to occur within **twelve (12) months** of recording.

(C) The City will not approve any building or occupancy permit within the tract(s) of the Final Plat until the proposed infrastructure of the associated Improvement Plans has been constructed and inspected by the City, regardless of whether sale of lots has occurred.

34-5-5 **FINAL PLAT SURVEY REQUIREMENTS.** The tract, or tracts, shall be surveyed in accordance with the following (note that the following should be adhered to for the Preliminary Plats by default):

(A) The property shall be surveyed by an Illinois Professional Land Surveyor, or under his or her active and personal direction.

(B) The boundary, and boundary description, shall be established with an accurate traverse and tied in accordance with the Illinois Coordinate System Act, **765 ILCS 225** and the Federal Geodetic Control Committee.

(C) The boundary, and boundary description shall be established based on North American Datum '83 (NAD83) to facilitate its position on the geographic information system aerial mapping of the County.

(D) The allowable error of closure and positional accuracy of the boundary traverse, or any portion of the Final Plat, at **sixty-eight percent (68%)** confidence level shall be **one-tenth of a foot (0.10)** or **1:20,000** for distances greater than **two thousand (2,000) feet** for urban property (Second Order, Class 1), and **one-tenth of a foot (0.10)** or **1:10,000** for distances greater than **one thousand (1,000) feet** for suburban property (Second Order, Class 2).

(E) Orthometric heights utilized shall be based on North American Vertical Datum, '88 (NAVD88).

34-5-6 **FINAL PLAT REQUIREMENTS.** The Final Plat shall be graphically depicted on **twenty-four (24) inch by thirty-six (36) inch** size prints, titled Final Plat, and have the following minimum information shown meeting survey requirements of this Code:

(A) **Administrative.**

(1) Lettering shall be **0.10"** or larger for legibility.

(2) All dimensions and graphical depictions shall be at a minimum scale of **one (1) inch** equals **one hundred (100) feet,** preferably larger.

(3) Deed and title commitments showing proof of ownership.

(4) Names, addresses, signatures, and dates of signatures of the owner(s) accepting said Final Plat, developer (if not the owner), Illinois Registered Land Surveyor, and Engineer.

(5) Proposed name of the subdivision which shall be a simple, complete, and explicit title which does not duplicate the name of a previously recorded plat, except in the case of Additions.

(6) The Section(s), Township, and Range numbers in which the tract(s) is located.

(7) The date, including month, day, and year.

(8) The legal boundary line description of tract being subdivided or developed in metes and bounds with the area of the boundary to not less than **1/100th of an acre.**

(9) The acreages of the tract prior to subdivision, Area, Gross, and the Area, Net.
(10) The Zone District Classification and proposed land use.
(11) Restrictive covenants, if any, subject to all ordinances and regulations of the City, to be recorded with the Final Plat to become covenants in the deeds for the lots.
(12) Purposes for which lots and sites are dedicated or reserved.
(13) A certification by the owner in fee of all the property embraced by the Final Plat, stating that the Final Plat is the free and voluntary act of the owner, the owner's intention to dedicate to public use forever the right-of-way and easements shown on the Final Plat including that adjoining existing right-of-way, and that the lines defining lots intended for future sale to other owners shown will be referenced in all future conveyances of los.
(14) Municipal Standard Details certifications and example text shall be included on the Final Plat.

(B) **Existing Information.**

(1) North arrow and scale, not to be less than **one (1) inch** equals **one hundred (100) feet**.
(2) Boundary lines with dimensions and bearings.
(3) Coordinate points at each exterior corner of the boundary.
(4) The name of each adjoining subdivision, intersecting street, and ownership of adjoining unsubdivided land.
(5) Reference to recorded subdivision plats within **three hundred (300) feet** of adjoining platted land by record name, date, and number.
(6) The position and character of all boundary markers set and/or found.
(7) Reference to nearest existing Section Corners with accurate distance and direction.
(8) Right-of-way lines.
(9) Lot lines and easements of each adjoining subdivision and tract, including the name of the owner of said easements.
(10) Existing easements within the proposed subdivision or tract, including the name of the owner of said easements.
(11) Topographical features, as required, such as existing trees; brush lines; fences; sanitary sewer manholes; water valves; overhead electric poles and guys; all above ground utilities; edges of pavement; curb lip, flowline, front face, and back; centerline of existing streets (coinciding with crown and not center of right-of-way); building corners; outlines of pavement and aggregate surfacing; drainage structures including inlets, manholes, headwalls, faces of boxes, detention outlets; creek

flowlines denoting direction of flow; ponds, lakes, and other stagnant bodies of water; railroads; cemeteries; parks; schools; and other features that may be deemed necessary by the City, to a point no less than **three hundred (300) feet** beyond the limits of the tract being subdivided or developed.

(C) **Dimensioning of Existing.**

(1) Bearing and distances of all boundary lines of the tract being subdivided or developed, or the exact angle of intersecting boundary lines.

(2) Reference of that above to the section, quarter section, or land grant lines and corners.

(3) Existing right-of-way and easement widths.

(D) **Proposed Featured.**

(1) Proposed right-of-way, lot, easement, and setback lines.

(2) Proposed centerline of streets.

(3) Proposed detention or retention facilities and their approximate normal pool elevation.

(4) Inclusion of all of the above features associated with adjoining improvements by the City or other agencies. Accurate stationing associated with said improvements shall be depicted as reference.

(5) Minimum first floor elevations for each lot.

(6) When Final Plats are prepared and recorded with the County prior to completion of all improvement associated with the Final Plat, all monumentation and placement of iron rods for lot corners shall be noted as "to be set" on the Final Plat drawings for recording in accordance with State law.

(E) **Dimensioning of Proposed.**

(1) Proposed centerline stationing every **fifty (50) feet.** Beginning stationing shall coincide with a boundary or property line.

(2) Curve data for all centerline curves, including point of intersection station, delta angle, degree of curve (chord definition), radius, tangent, length, external, and points of curvature and tangent stations.

(3) Dimensions of all radii at intersections, or notation in text thereof.

(4) Width dimensions of all right-of-way and easements.

(5) The measurement of all lot line and lot corner angles, or the direction thereof.

(6) Front, side, and back lot and outlot line lengths for all lots.

(7) All lot, outlot, and dedication areas other than rights-of-way and easements, in square feet.

(8) Progressive numbering, without letter prefixes or suffixes, of all lots.

(F) **Documentation.** In addition to graphical depictions of the tract being subdivided or developed, the developer shall also present the following to the City:

(1) A site Geotechnical Report signed and sealed by an Illinois Registered Professional Engineer with geotechnical engineering qualifications.

(2) A projection of the number of households; population; and employees, in the case of commercial or industrial development, in writing.

(3) A description of site generated traffic and its impacts on adjoining street and highway systems, in writing. The City reserves the right, as outlined in previous sections of Code, to require the developer to submit a traffic study at the time of Preliminary Plat submittals.

(4) Calculations of anticipated sanitary sewer discharges from the subdivision or development and the capacity of downstream systems, as outlined in previous sections of Code.

(5) **One (1)** electronic copy of record documents (unsigned, for boundaries only) in a format dictated by the City.

(G) **Review Fees.** No fees are due from the developer to the City at the time of filing of the Final Plat. In the event that the City is required to review submitted Final Plat following a second review by the City, the developer shall pay a non-refundable fee in the amount of **Two Hundred Fifty Dollars ($250.00)** to the City.

34-5-7 VACATION OF PLATS. Any plat or part thereof may be vacated by the owner of the tract, at any time before the sale of any lot therein, by a written vacation instrument to which a copy of the plat is attached. If there are public service facilities in any street, other public way, or easement shown on said plat, the instrument shall reserve to the City or other public entity owning such facilities, the property, rights-of-way, and easements necessary for continuing public service by means of those facilities and for maintaining or reconstructing the same. The vacation instrument shall be approved by the City in the same manner as plats for subdivisions and shall also be approved by all other public entities involved in the initial platting including, but not limited to, Clinton County and IDOT. In the case of platted tracts wherein any lots have been sold, the written vacation instrument must also be signed by all the owners of lots in said tract.

[This page was left blank intentionally.]

CITY OF BREESE

MUNICIPAL STANDARD DETAILS

GUIDELINES FOR REVIEWS & APPROVALS INCLUDING PHASED DEVELOPMENT

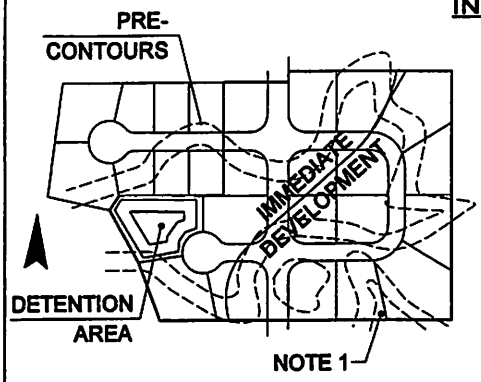

ENTIRE TRACT HAS 26 LOTS. TRACT OF INITIAL, IMMEDIATE DEVELOPMENT HAS 18 LOTS, INCLUDING THE DETENTION AREA WHICH MUST BE DESIGNED FOR ALL 26 LOTS EXCEPT THAT IMMEDIATE OUTLETTING TO BE DESIGNED/CONSTRUCTED FOR JUST THE 18 LOTS INDEFINITELY. THE PRELIMINARY PLAT WILL ENTAIL ALL 26 LOTS. THE INITIAL IMPROVEMENT PLANS DESIGN & PLAN SUBMITTALS WILL ENTAIL ALL 26 LOTS WITH CLEAR NOTATION THAT THE 18 LOTS ARE CONSTRUCTED FIRST WITH THE ASSOCIATED FINAL PLAT SHOWING JUST THE 18 LOTS.
DEVELOPMENT OF THE REMAINING EIGHT LOTS MUST OCCUR WITHIN FIVE (5) YEARS OF APPROVAL OF THE INITIAL IMPROVEMENT PLANS BY COUNCIL BY BEGINNING ANOTHER IMPROVEMENT PLAN SUBMITTAL PROCESS FOR SUCH.

NOTE 1:
THE EXISTING RUNOFF HERE WOULD HAVE TO BE CHANNELIZED TO PROPOSED DETENTION AREA DUE TO POST- DISCHARGES BEING HIGHER THAN PRE- AT SAID POINT ALONG THE BOUNDARY. SEE CODE REQUIREMENTS REGARDING CONDUIT OR OPEN DITCHING FOR CHANNELIZATION TO DETENTION AREA WITHIN THE BOUNDARY.

SCHEDULES FOR REVIEWS & APPROVALS INCLUDING PHASED DEVELOPMENT

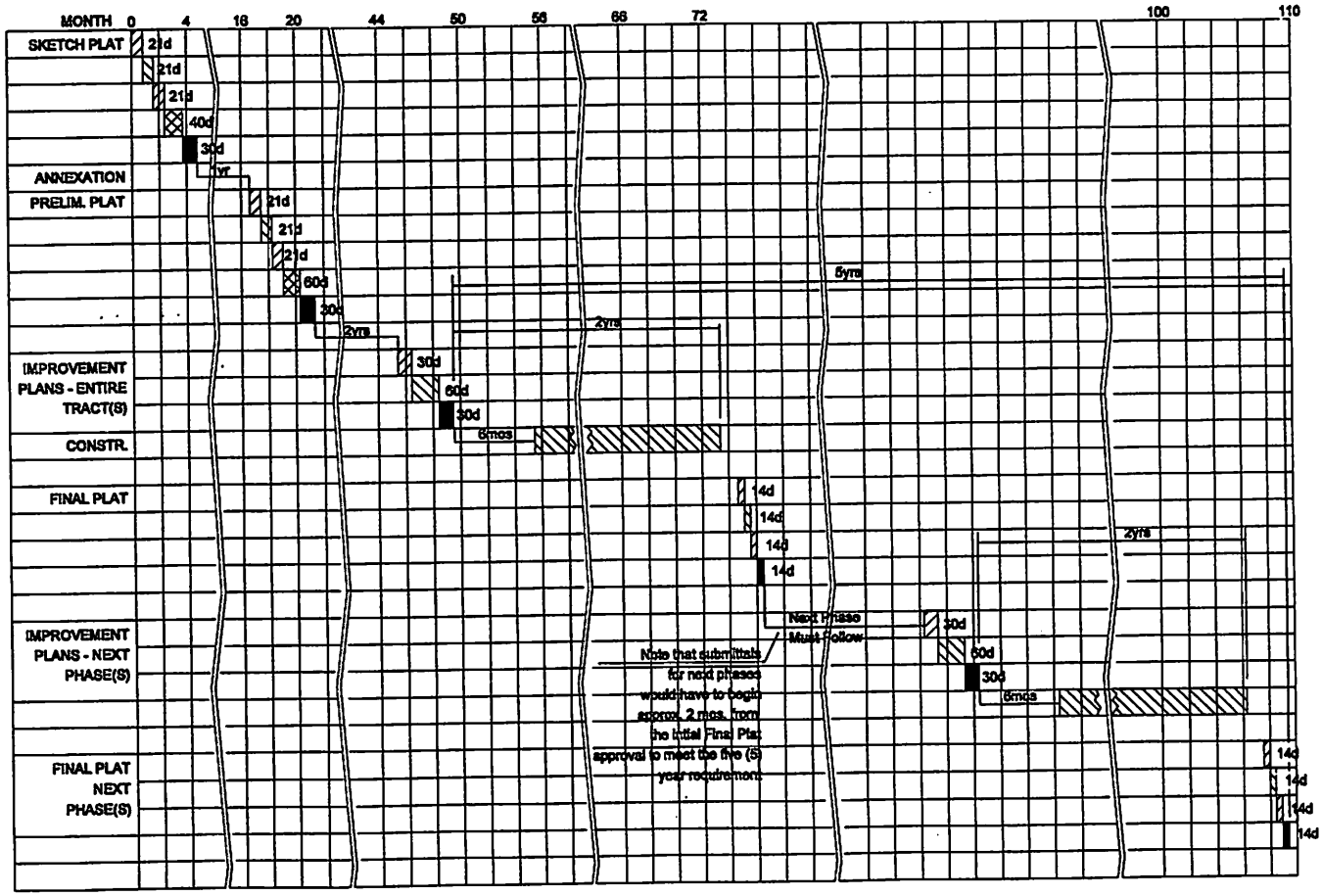

NOTE: THE ABOVE REPRESENTS A POSSIBLE SCHEDULE WITH MAXIMUM DAYS AND MONTHS FOR TWO (2) TYPICAL REVIEWS BY THE CITY PUBLIC WORKS DEPARTMENT. ADDITIONAL REVIEWS AND SUBMITTALS MAY BE REQUIRED.

- CITY PUBLIC WORKS & AGENTS
- DEVELOPER & AGENTS
- CITY PLANNING COMMITTEE
- CITY COUNCIL

FIGURE 34-2-A1

CADD FILE: server/5662/breesecodepvt34-2-A1.dgn March 12, 2007

HENRY, MEISENHEIMER & GENDE, INC., 1075 LAKE RD., P.O. BOX 70, CARLYLE, ILLINOIS 62231 (618)-594-3711 WWW.HMGENGINEERS.COM

CITY OF BREESE

MUNICIPAL STANDARD DETAILS

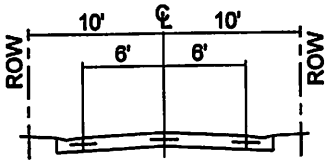

① ALLEYS

NO PARKING. ALL PAVEMENT STRUCTURE SHALL BE EQUAL TO THAT FOR LOCAL RESIDENTIAL AND SHALL HAVE V GUTTER

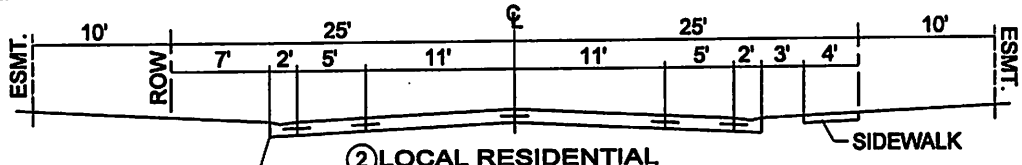

② LOCAL RESIDENTIAL

PARKING: ONE SIDE ONLY.

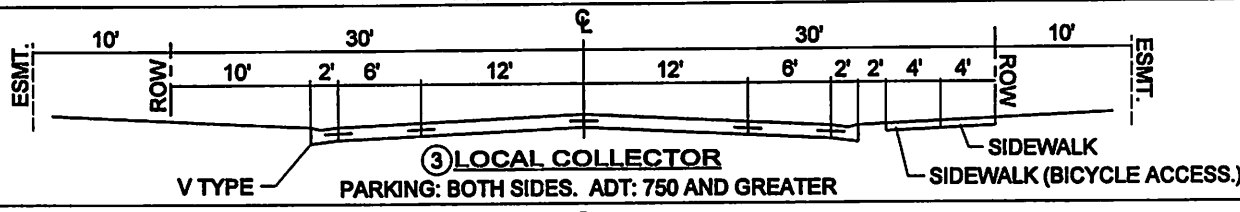

③ LOCAL COLLECTOR

PARKING: BOTH SIDES. ADT: 750 AND GREATER

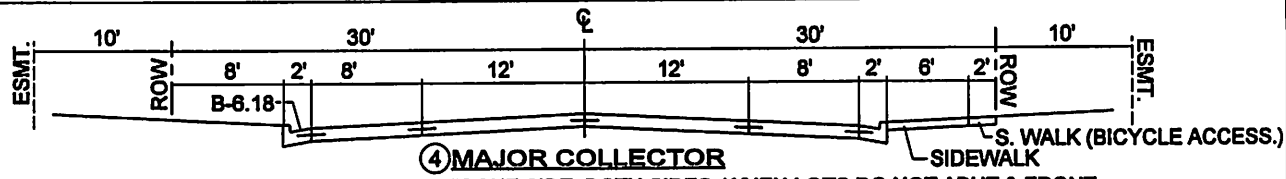

④ MAJOR COLLECTOR

PARKING: WHEN LOTS ABUT & FRONT ONE SIDE, BOTH SIDES. WHEN LOTS DO NOT ABUT & FRONT, UTILIZE WIDTHS OF THE LOCAL COLLECTOR WITH TYPE B-6.18 CURB

ADT: 2,000 AND GREATER

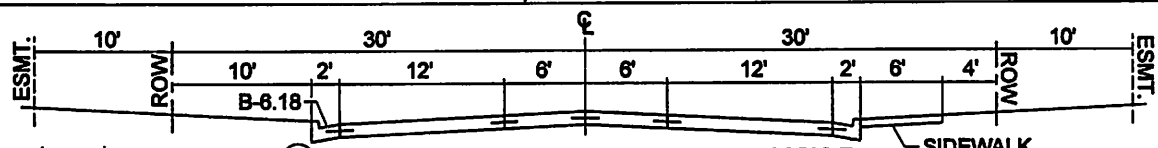

⑤ BUSINESS OR INDUSTRIAL COLLECTOR

PARKING: NONE

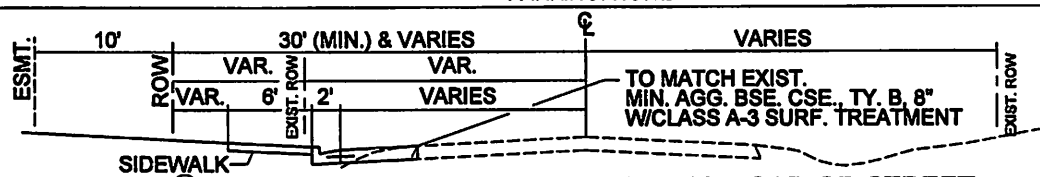

⑥ LAYOUT ADJACENT TO ANY EXISTING ROAD OR STREET

CLASSIFICATION AND DIMENSIONS DETERMINED AT PRELIMINARY PLAT STAGE

GUIDELINES FOR ESTABLISHING STREET CLASSIFICATIONS

(THESE MAY BE REVISED BY THE CITY ON A CASE-BY-CASE BASIS)

MINIMUM TRIP GENERATION RATES TO BE APPLIED IN LIEU OF TRAFFIC STUDY (TRIP END DEFINED AS A TRIP GENERATED AT AND ATTRACTED TO. EQUIV. TO ADT). SINGLE FAMILY DETACHED = 10 TRIP ENDS/DAY/DWELLING UNIT. APARTMENT = 7 TRIP ENDS/DAY/DWELLING UNIT. CONDO (DUPLEX) = 7 TRIP ENDS/DAY/DWELLING UNIT

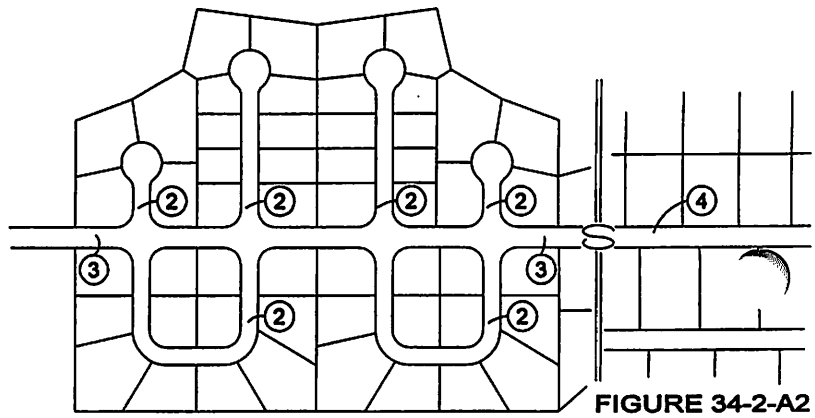

FIGURE 34-2-A2

CADD FILE: server/5662/breesecodepvt34-2-A2.dgn Feb. 6, 2008

HENRY, MEISENHEIMER & GENDE, INC., 1075 LAKE RD., P.O. BOX 70, CARLYLE, ILLINOIS 62231 (618)-594-3711 WWW.HMGENGINEERS.COM

CITY OF BREESE

MUNICIPAL STANDARD DETAILS

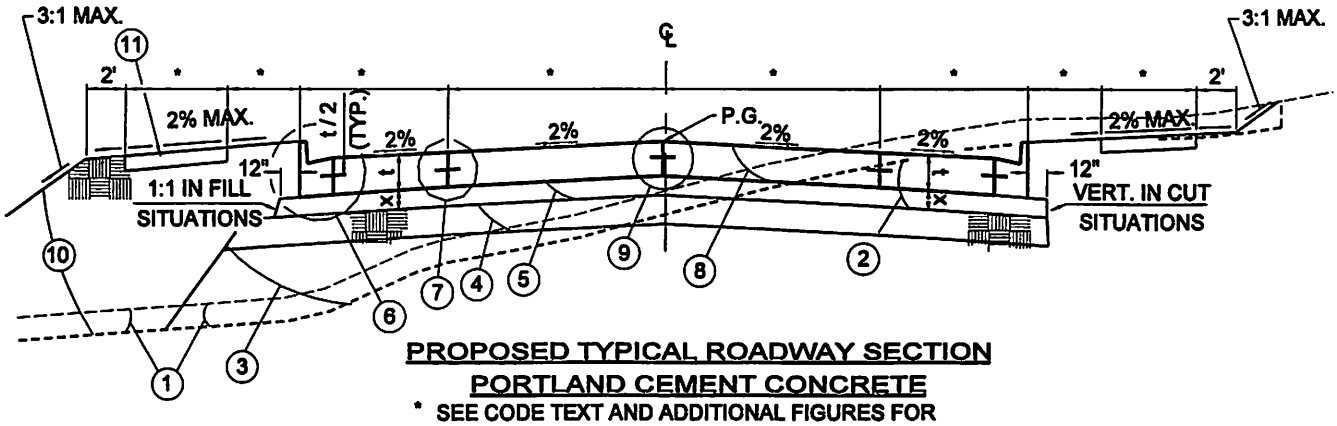

PROPOSED TYPICAL ROADWAY SECTION
PORTLAND CEMENT CONCRETE

* SEE CODE TEXT AND ADDITIONAL FIGURES FOR STREET CLASSIFICATION AND DIMENSIONS.

LEGEND

(1) TOPSOIL REMOVAL
(DEPTH AS REQUIRED BY SOILS INVESTIGATION)

(2) EARTH EXCAVATION
(CAN BE USED FOR STRUCTURAL EARTH FILL OR EMBANKMENT)

(3) COMPACTED STRUCTURAL EARTH FILL (MATERIAL REQUIREMENTS PER SOILS INVESTIGATION)

(4) LIME MODIFIED SOIL, 6" (MIN.)

(5) AGGREGATE BASE COURSE, TYPE B, 4" (MIN.)

(6) TYPICAL CURB DETAILS:

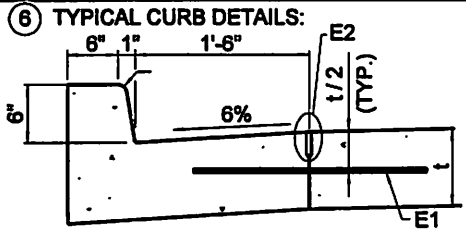

B-6.18 TYPE
(PER IDOT STD. 606001)

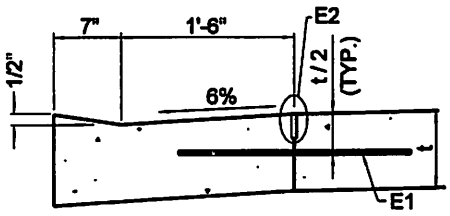

B-6.18 TYPE: DEPRESSED FOR ADA RAMP
(MODIFIED IDOT STD. 606001)

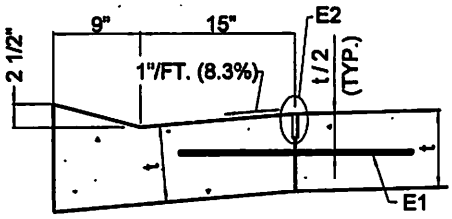

V TYPE

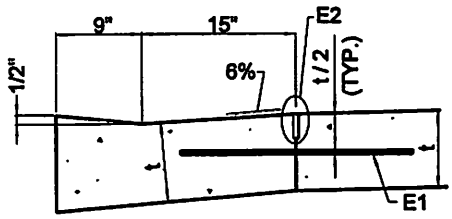

V TYPE: DEPRESSED FOR ADA RAMP

E1 = NO. 6 TIE BARS, 24" LONG AT 24" CTS. PER IDOT STD. 606001 (NO. 6 BARS SHALL NOT BE BENT), OR NO. 5 BARS, 24", AT 15" CTS. (NO. 5 BARS MAY BE BENT)

E2 = CURB SHALL BE POURED SEPARATE FROM ADJOINING LANE, SAWCUT AND SEALANT NOT REQUIRED BUT EDGER MUST BE USED. THE CITY MAY APPROVE CURB POURED WITH PAVEMENT, WITH "E1" AND "E2" EQUAL TO THAT FOR SAWED LONGIT. JNT.

t = THICKNESS OF PAVEMENT, 6" (MIN.).

CURB SHALL BE CLASS "SI" CONCRETE WHEN SEPARATE FROM PAVEMENT.

(7) SAWED LONGITUDINAL JOINT

(8) PORTLAND CEMENT CONCRETE PAVEMENT, 6" (MINIMUM). NOTE THAT FOR LOCAL COLLECTORS, 7" SHALL BE USED & FOR MAJOR COLLECTORS & BUSINESS OR INDUSTRIAL, 8" (MINIMUM) SHALL BE USED. FOR MAJOR COLLECTORS, BUSINESSS, OR INDUSTRIAL, DOWELLED TRANSV. CONTRACTION JOINTS SHALL BE USED. ALL TRANSVERSE JOINTS SHALL BE AT 15' MAX. CLASS "PV" CONCRETE, BROOM FINISHED. ALL PAVEMENT BETWEEN CURB AND CENTERLINE, LEFT OR RIGHT, SHALL BE POURED SEPARATELY FROM THAT OPPOSITE CENTERLINE OR BY OTHER METHODS APPROVED BY THE CITY DURING IMPROVEMENT PLAN REVIEW.

(9) SAWED LONGITUDINAL JOINT (SEE "SAWED LONGITUDINAL JOINT" DETAIL REGARDING BAR PLACEMENT. PAVT. EITHER SIDE OF JOINT MUST BE POURED SEPARATELY & SAWCUT/SEALANT IS NOT REQUIRED)

(10) EMBANKMENT (CAN BE TOPSOIL REMOVAL OR EARTH EXCAVATION MATERIAL)

(11) PORTLAND CEMENT CONCRETE SIDEWALK, 4" (MIN.), CLASS "SI" CONCRETE PER STD. SPECS. (SHOWING SIDEWALK FOR FILL OR CUT SITUATIONS)

FIGURE 34-2-B1A

CADD FILE: server/5862/breesecodepvt34-2-B1A.dgn Aug. 10, 2007

CITY OF BREESE

MUNICIPAL STANDARD DETAILS

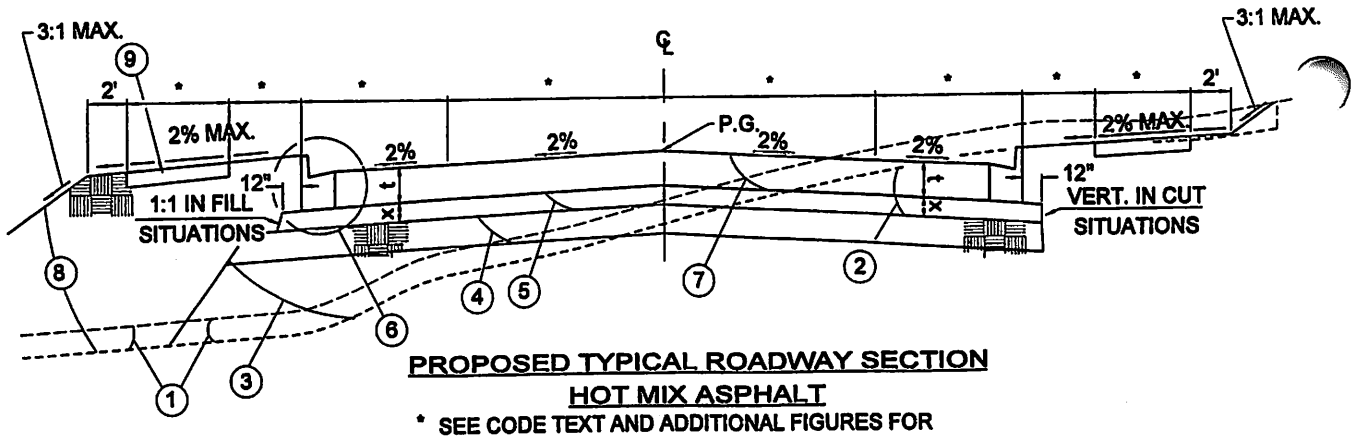

PROPOSED TYPICAL ROADWAY SECTION
HOT MIX ASPHALT

* SEE CODE TEXT AND ADDITIONAL FIGURES FOR STREET CLASSIFICATION AND DIMENSIONS.

LEGEND

1. TOPSOIL REMOVAL (DEPTH AS REQUIRED BY SOILS INVESTIGATION)
2. EARTH EXCAVATION (CAN BE USED FOR STRUCTURAL EARTH FILL OR EMBANKMENT)
3. COMPACTED STRUCTURAL EARTH FILL (MATERIAL REQUIREMENTS PER SOILS INVESTIGATION)
4. LIME MODIFIED SOIL, 6" (MIN.)
5. AGGREGATE BASE COURSE, TYPE B, 8" (MIN.)
6. TYPICAL CURB DETAILS:

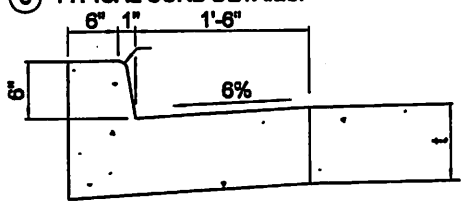

B-6.18 TYPE
(PER IDOT STD. 606001)

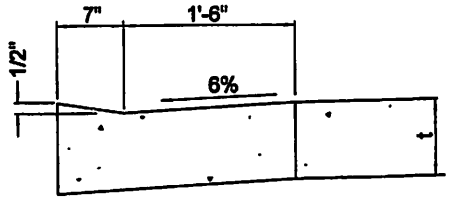

B-6.18 TYPE: DEPRESSED FOR ADA RAMP
(MODIFIED IDOT STD. 606001)

t = THICKNESS OF PAVEMENT, 6" (MIN.). FOR LOCAL COLLECTORS, 8" (MIN.). FOR MAJOR COLLECTORS, 10" (MIN.)

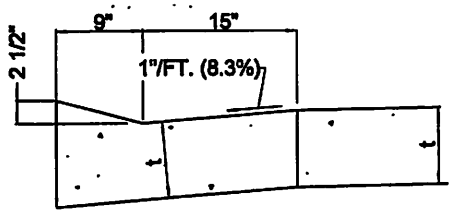

V TYPE

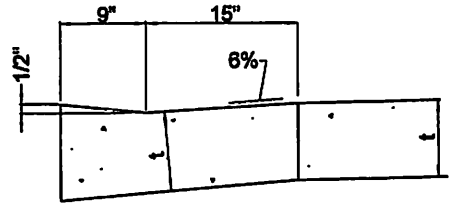

V TYPE: DEPRESSED FOR ADA RAMP

CURB SHALL BE CLASS "SI" CONCRETE

7. HOT MIX ASPHALT (HMA) SURFACE COURSE, MIX "C", N50, 1 1/2" (MIN.), OVER HMA BINDER COURSE, IL-19.0, N50, 1 1/2" (MIN.), OVER HMA BASE COURSE, 3" (MIN.). NOTE FOR LOCAL COLLECTORS, HMA BASE COURSE SHALL BE 5" (MIN.) AND FOR MAJOR COLLECTORS, THE SURFACE AND BINDER SHALL BE 2" (MIN.) AND THE HMA BASE SHALL BE 6" (MIN.). ALL HMA SHALL BE PER CURRENT IDOT STANDARD SPECIFICATIONS.
8. EMBANKMENT (CAN BE TOPSOIL REMOVAL OR EARTH EXCAVATION MATERIAL)
9. PORTLAND CEMENT CONCRETE SIDEWALK, 4" (MIN.), CLASS "SI" CONCRETE PER STD. SPECS. (SHOWING SIDEWALK FOR FILL OR CUT SITUATIONS)

CADD FILE: server/5662/breesecodepvt34-2-B1B.dgn Aug. 10, 2007

FIGURE 34-2-B1B

CITY OF BREESE

MUNICIPAL STANDARD DETAILS

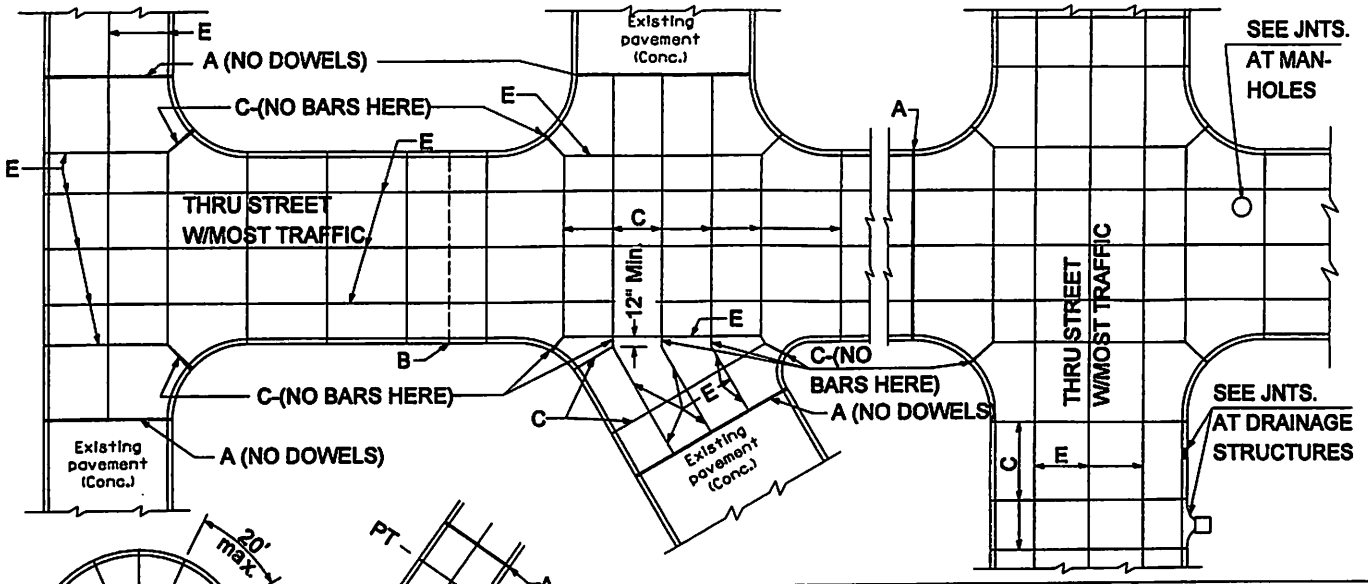

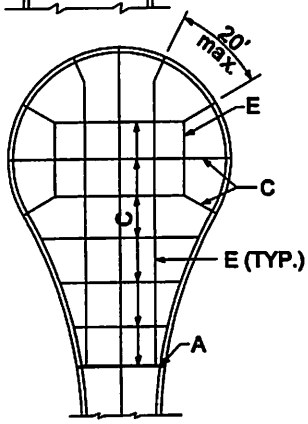

CUL-DE-SAC DETAILS

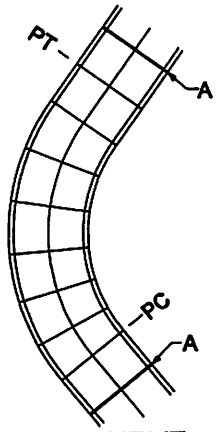

HORIZ. CURVE DETAILS

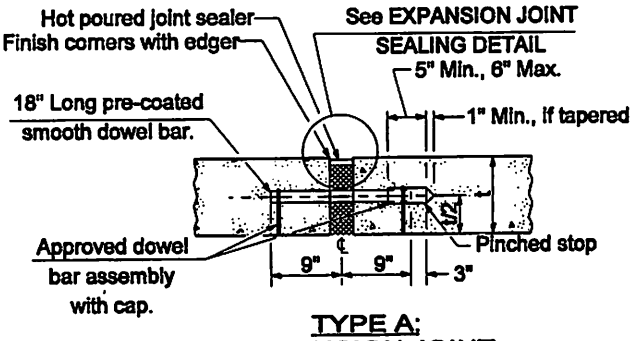

TYPE A: EXPANSION JOINT
(For pavements with equal thickness)

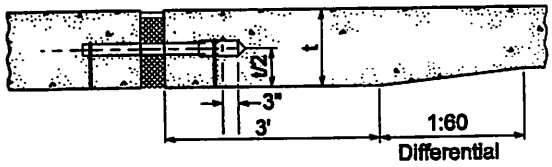

TYPE A: EXPANSION JOINT
(For pavements with unequal thickness
See EXPANSION JOINT SEALING DETAIL)

CONCRETE THICKNESS	DOWEL BAR DIAMETER
8" or greater	1 1/2"
7" thru 8"	1 1/4"
Less than 7"	1"

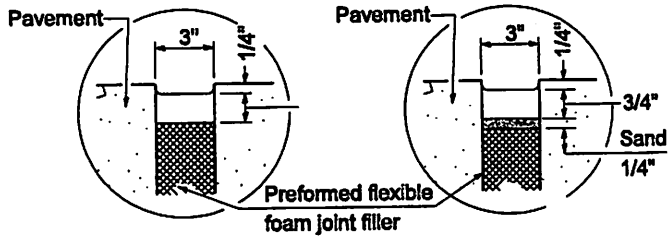

EXPANSION JOINT SEALING DETAIL

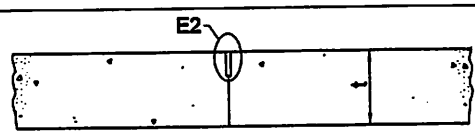

TYPE C: SAWED TRANSVERSE JOINT
MAXIMUM 15' SPACING BETWEEN SAWED TRANS. JNTS.

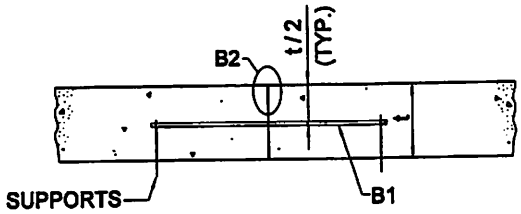

TYPE B: TRANVERSE CONSTRUCTION JOINT

B1 = NO. 6 TIE BAR, 30" LONG (MIN.) AT 30" CENTERS (SHALL NOT BE BENT, MAY BE MECHANICALLY PLACED)

B2 = USE EDGER

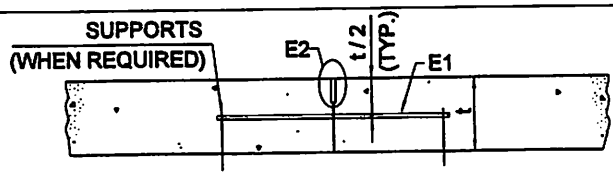

TYPE E SAWED LONGITUDINAL JOINT

E1 = NO. 6 TIE BARS, 30" LONG AT 30" CTS. PER IDOT STD. 606001 (NO. 6 BARS SHALL NOT BE BENT), OR NO. 5 BARS, 30", AT 20" CTS. (NO. 5 BARS MAY BE BENT)

E2 = 1/8" MIN. WIDE SAWCUT, t/3 DEEP, FILL WITH HOT POURED JOINT SEALANT PER 1050.02 OF STD. SPECS. OR APPROVED EQUAL.

FIGURE 34-2-B2

CADD FILE: server/5662/breesecodepvt34-2-B2.dgn Feb. 20, 2006

HENRY, MEISENHEIMER & GENDE, INC., 1075 LAKE RD., P.O. BOX 70, CARLYLE, ILLINOIS 62231 (618)-594-3711 WWW.HMGENGINEERS.COM

CITY OF BREESE

MUNICIPAL STANDARD DETAILS

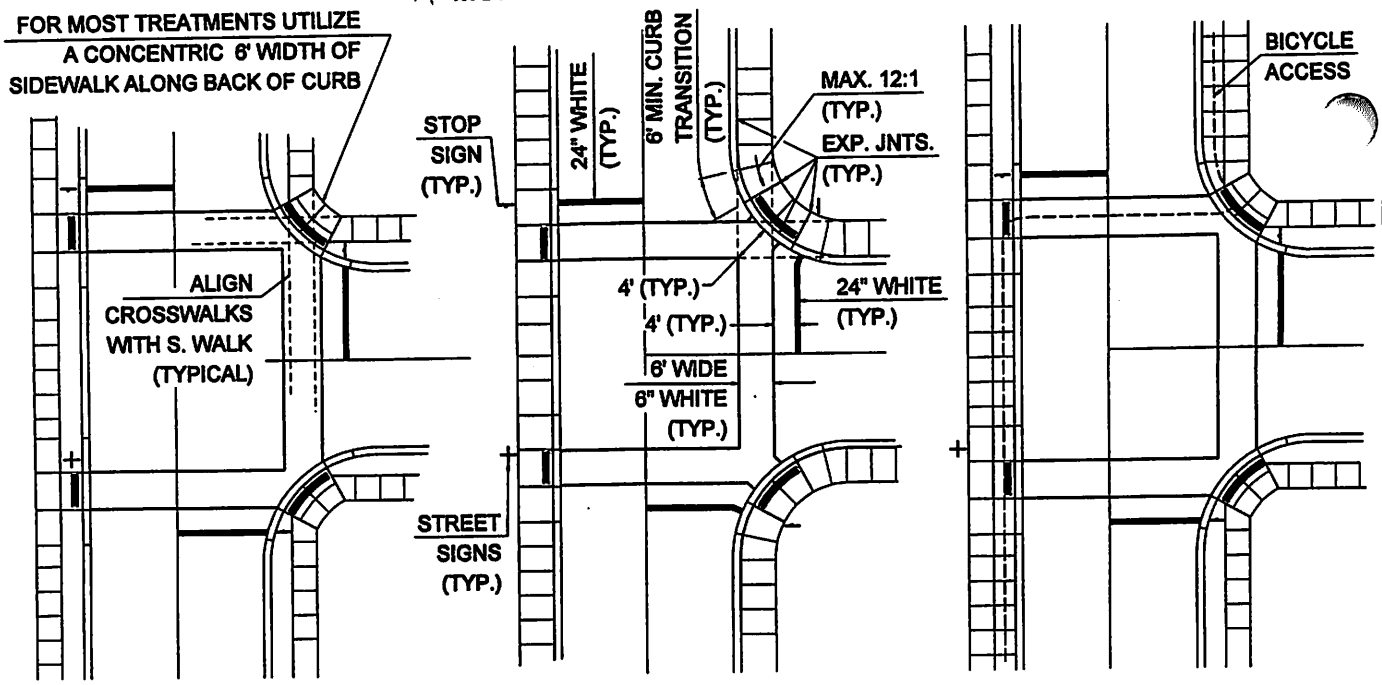

W/SIDEWALK + GREENSPACE

W/SIDEWALK ABUTTING B/C

W/BICYCLE ACCESS

INTERSECTION TREATMENTS

ALL PAVEMENT MARKINGS SHALL BE IDOT PAINT PAVEMENT MARKING

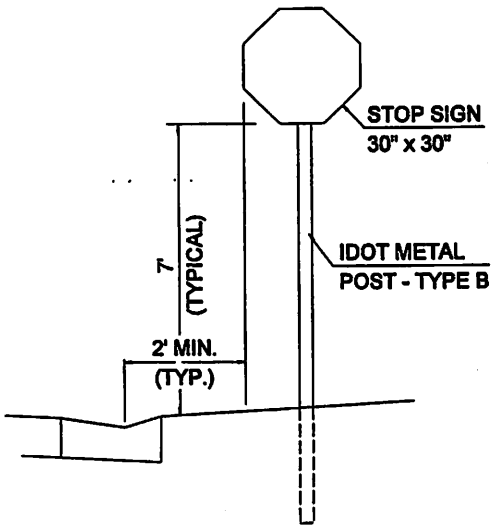

GENERAL SIGN PLACEMENT

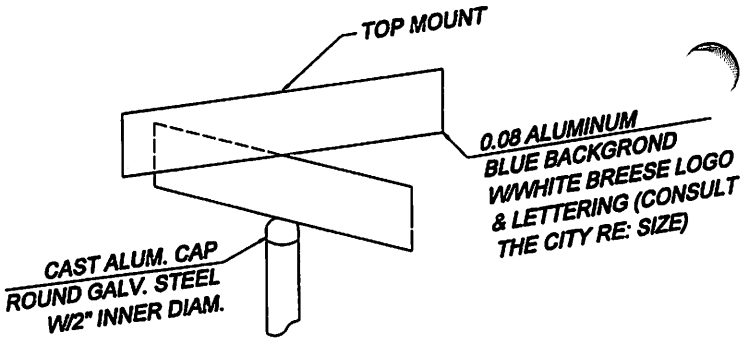

GENERAL - CITY STREET SIGNS

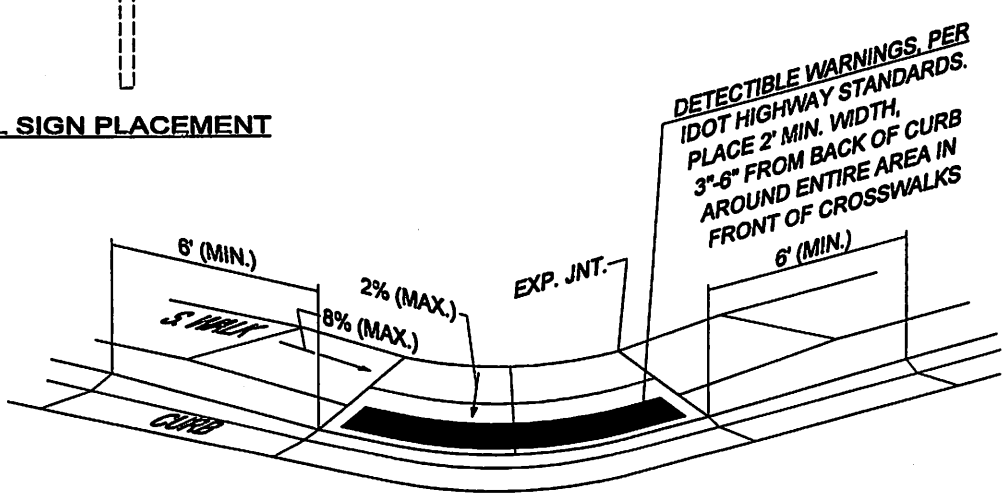

ISOMETRIC OF RAMP CONSTRUCTION

(SHOWING W/SIDEWALK + GREENSPACE, LARGE RADII)

FIGURE 34-2-B3

CADD FILE: server/5662/breesecodepvt34-2-B3.dgn Feb. 20, 2006

HENRY, MEISENHEIMER & GENDE, INC., 1075 LAKE RD., P.O. BOX 70, CARLYLE, ILLINOIS 62231 (618)-594-3711 WWW.HMGENGINEERS.COM

CITY OF BREESE

MUNICIPAL STANDARD DETAILS

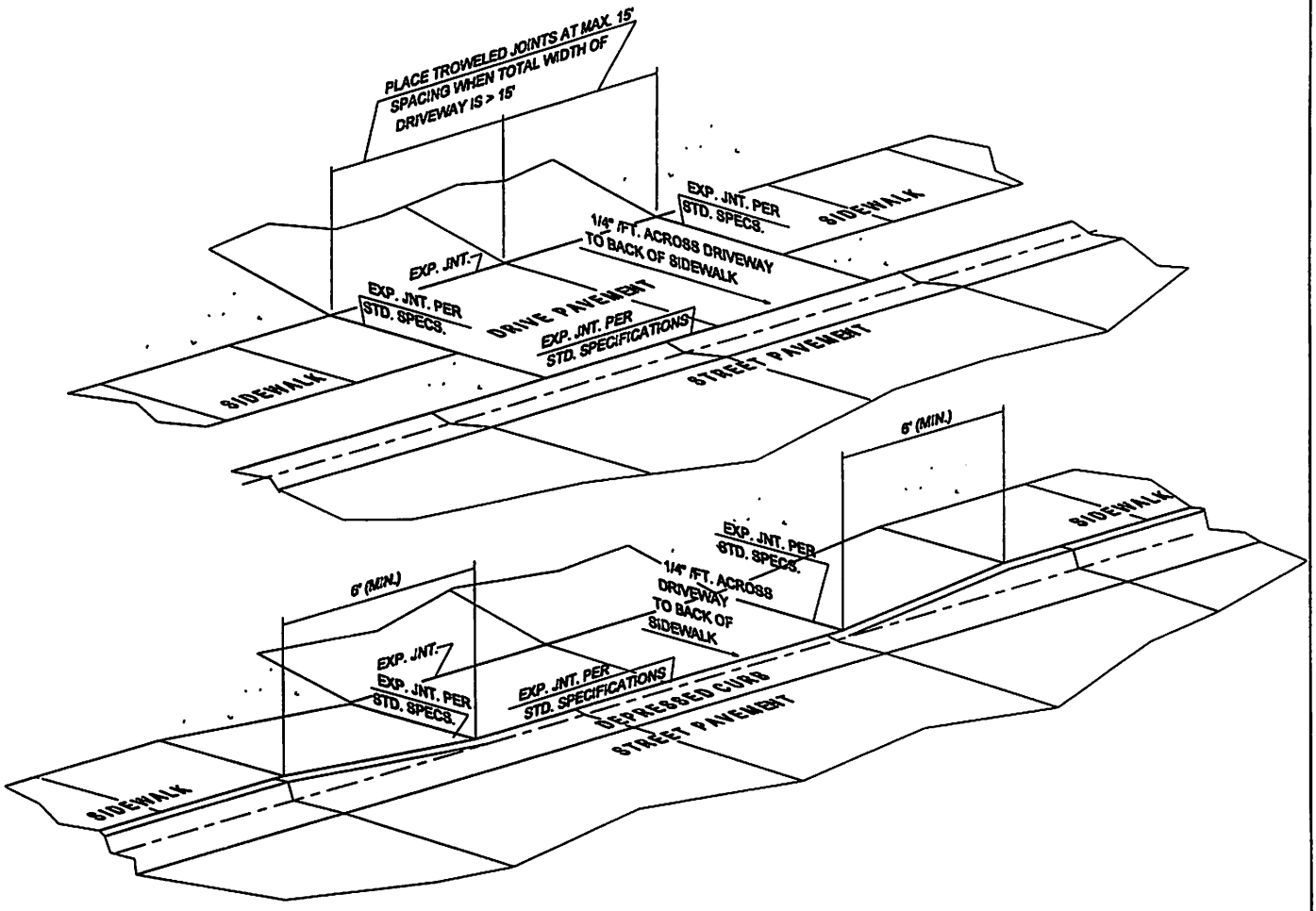

ISOMETRICS OF DRIVEWAY CONSTRUCTION

CONSTRUCT DRIVEWAY PAVEMENT OF CLASS SI CONCRETE, MINIMUM 6" THICKNESS

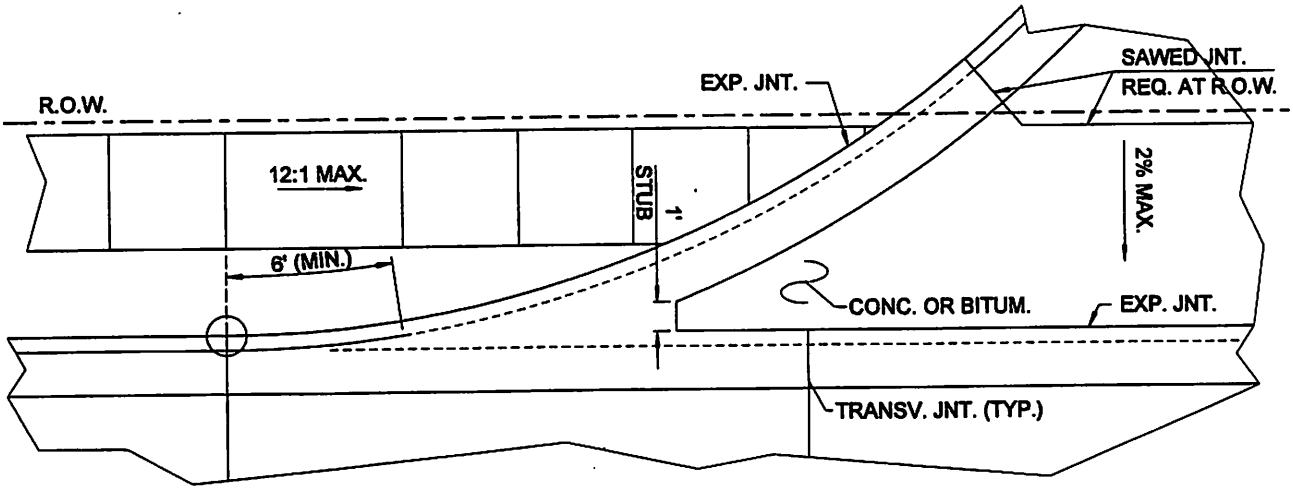

DETAIL - BUSINESS & COMMERCIAL DRIVEWAYS

UTILIZE WHEN CURB IS INSTALLED ALONG DRIVEWAY

FIGURE 34-2-B4

CADD FILE: server/5662/breesecodepvt34-2-B4.dgn Feb. 20, 2006

CITY OF BREESE

MUNICIPAL STANDARD DETAILS

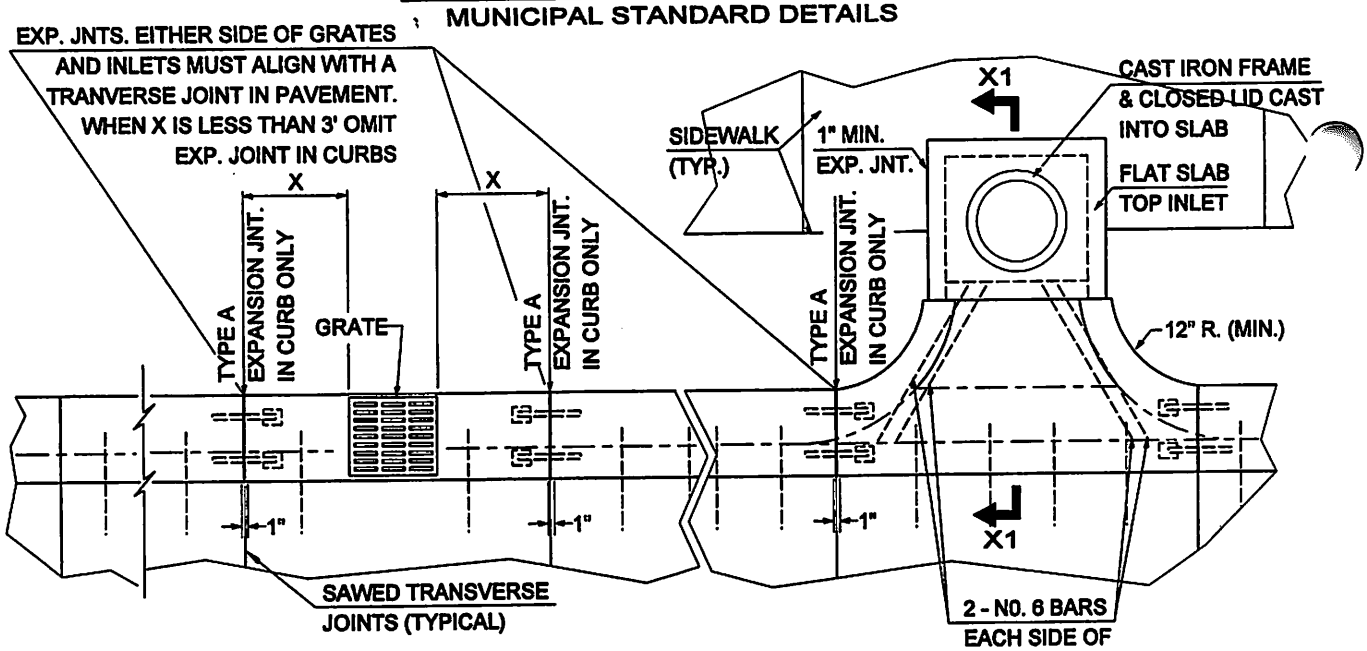

JOINTS AT DRAINAGE STRUCTURES

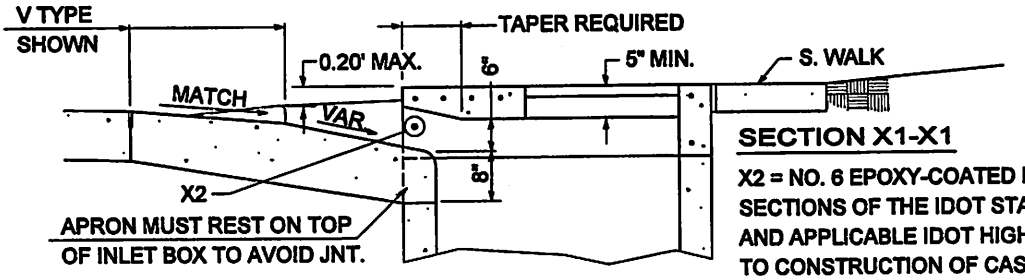

SECTION X1-X1

X2 = NO. 6 EPOXY-COATED REINF. BAR. APPLICABLE SECTIONS OF THE IDOT STANDARD SPECIFICATIONS AND APPLICABLE IDOT HIGHWAY STANDARDS SHALL APPLY TO CONSTRUCTION OF CAST OR PRE-CAST STRUCTUR

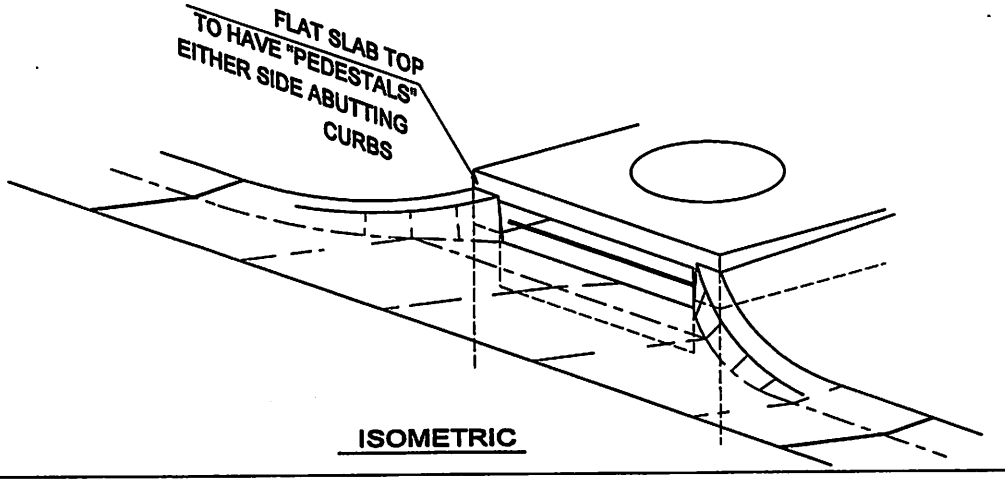

ISOMETRIC

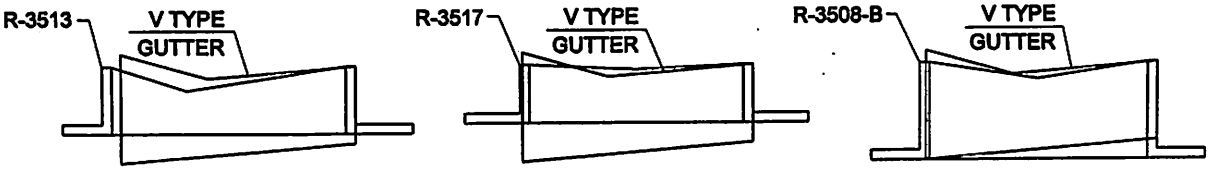

INLET FRAMES & GRATES IN V TYPE GUTTER

NEENAH, OR EQUAL, TYPE SHOWN. EDGE OF PAVEMENT ELEVATION WITH NO MODIFICATION TO STREET CROSS SLOPE TO BE CALLED OUT FOR SETTING FRAMES. STREETSIDE FRAME EDGE TO BE FLUSH WITH GUTTER; VARY BACK CURB POUR SI THAT CURB MEETS BACK OF FRAME (TRANSITION IN APPROXIMATELY 5'). THESE GRATES ARE ACCEPTABLE AND OTHER. WILL BE CONSIDERED ON A CASE-BY-CASE BASIS. "HIGH BACK" GRATES ARE NOT ACCEPTABLE FOR V TYPE.

FIGURE 34-2-B5

CADD FILE: server/5662/breesecodepvt34-2-B5.dgn Feb. 20, 2006

HENRY, MEISENHEIMER & GENDE, INC., 1075 LAKE RD., P.O. BOX 70, CARLYLE, ILLINOIS 62231 (618)-594-3711 WWW.HMGENGINEERS.COM

CITY OF BREESE

MUNICIPAL STANDARD DETAILS

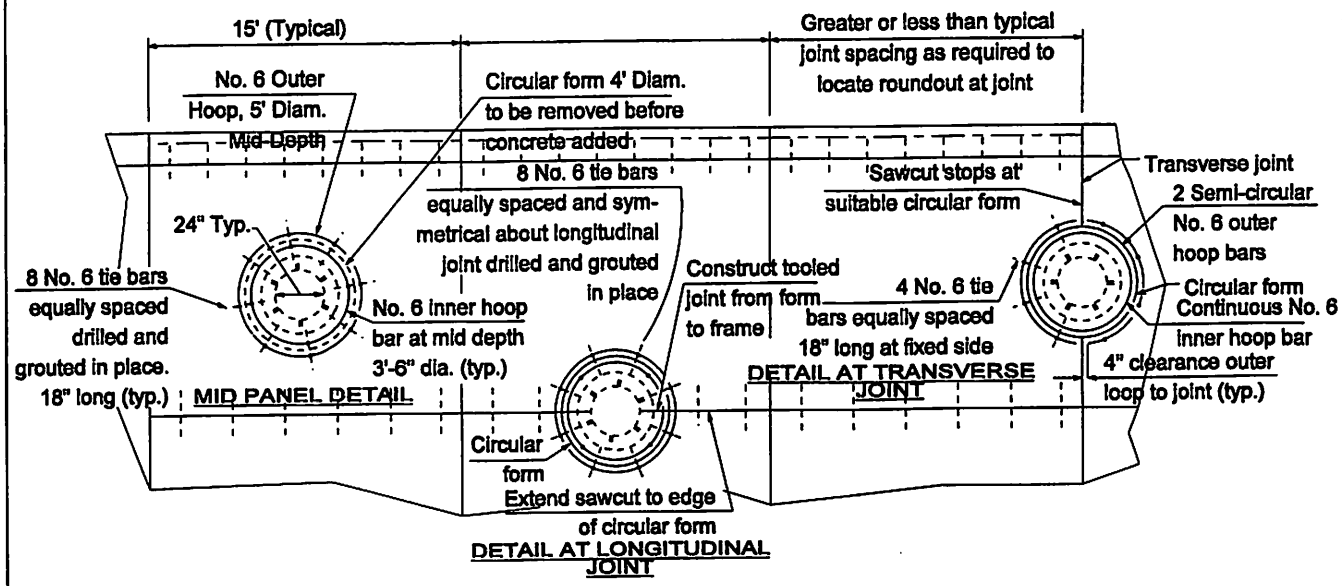

P.C.C. PAVEMENT ROUNDOUTS

DETAIL REPRESENTS MODIFICATIONS TO IDOT HIGHWAY STD. 420111. INTENDED TO BE USED AROUND STORM AND SANITARY MANHOLE TOPS, AND, WHERE APPLICABLE, OTHER APPURTENANCES GREATER THAN 1' IN DIAMETER. DIAMOND AND SQUARE BLOCKOUTS ARE NOT TO BE USED. MANHOLES SHALL BE LOCATED SUCH THAT THE DETAILS OF ROUNDOUTS NEAR LONGITUDINAL JOINTS AND TRANSVERSE JOINTS FROM THE HIGHWAY STD. ARE AVOIDED. TRANSVERSE JOINTS SHALL BE POSITIONED TO FALL IN LOCATIONS OF THIS DETAIL. TIE BARS CAN BE POURED IN PLACE. CONCRETE WITHIN THE CIRCULAR FORM SHALL BE CLASS SI CONCRETE.

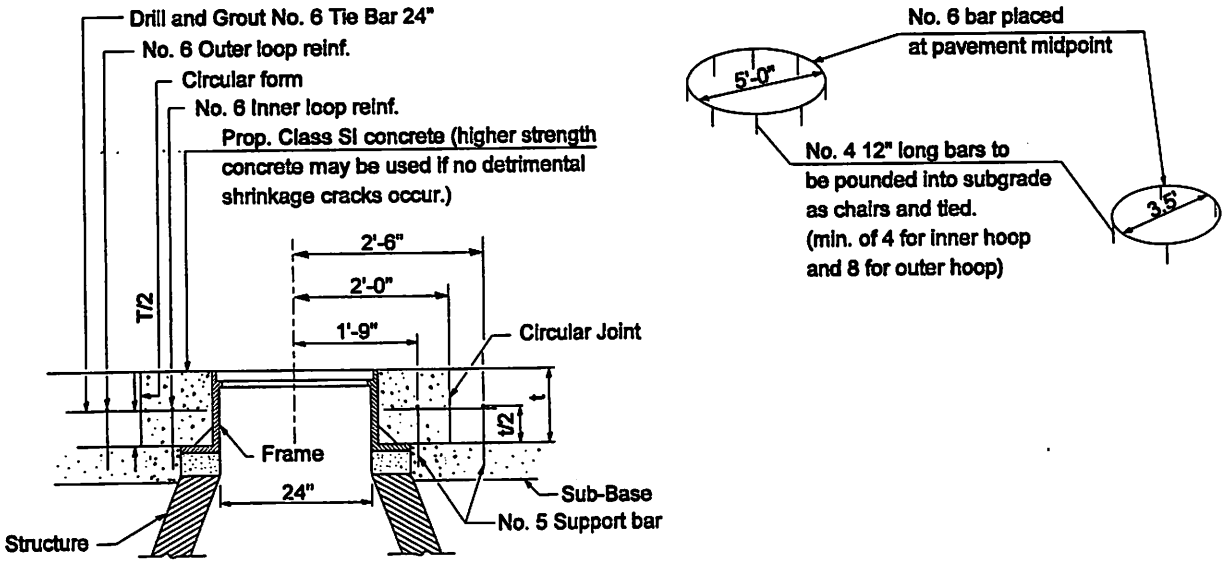

DETAIL OF REINFORCEMENT FOR PAVEMENT ROUNDOUT

PAVEMENT ROUNDOUTS

FIGURE 34-2-B6

CADD FILE: server/5662/breesecodepvt34-2-B6.dgn

CITY OF BREESE

MUNICIPAL STANDARD DETAILS

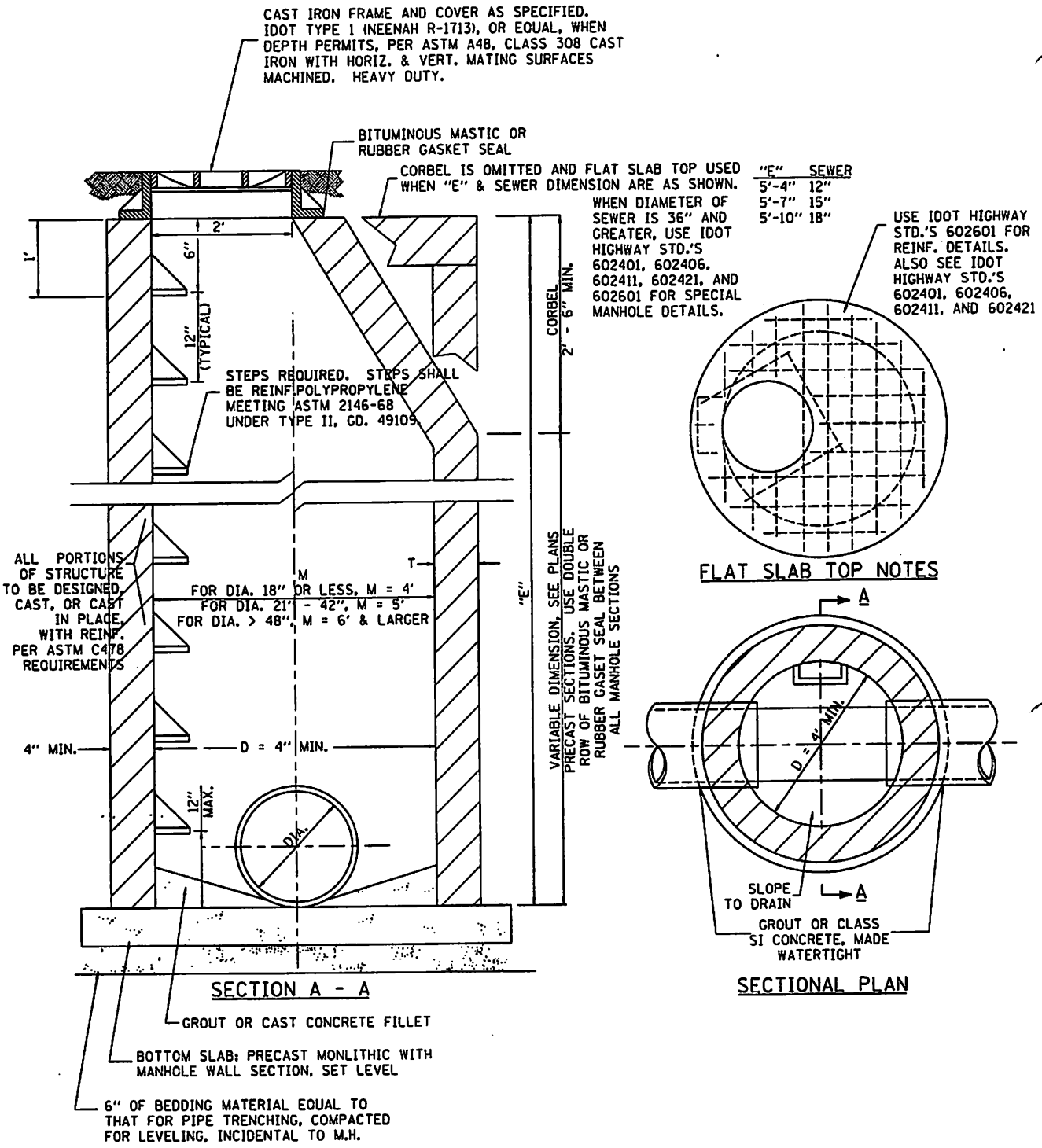

NOTES:

1. CONSTRUCTION AND INSTALLATION SHALL BE PER IDOT STANDARD SPECIFIATIONS FOR ROAD AND BRIDGE CONSTRUCTION, LATEST EDITION
2. "T" DIMENSION SHALL BE AS PER ASTM C478 AND IDOT HIGHWAY STANDARDS. ALL CONCRETE, AND CONSTRUCTION SHALL BE PER IDOT STANDARD SPECIFICATIONS FOR ROAD AND BRIDGE CONST.

STORM SEWER MANHOLE DETAILS

FIGURE 34-2-B7

CADD FILE: server/5662/breesecodepvt34-2-B7.dgn

GENERAL

This plan has been prepared to comply with the provision of the NPDES Permit Number ILR10-_____ issued by the Illinois Environmental Protection Agency for storm water discharges from construction site activities.

The following plan was established and included in these plans to direct the Contractor in the placement of temporary erosion control systems and to provide a storm water pollution prevention plan for compliance under NPDES. The Contractor shall abide to all requirements within this plan as part of the contract.

The purpose of this plan is to prevent / minimize siltation within the construction zone and to eliminate sediments from entering and leaving the construction zone by utilizing proper temporary erosion control systems and providing ground cover within a reasonable time.

Certain items shall be placed as shown in this plan. Other items shall be placed as directed by the Engineer based on situations resulting from type of activities, time of year, and weather conditions.

The Contractor shall place permanent erosion control and seeding within a reasonable amount of time; therefore, reducing areas open to the possibility of erosion. The Engineer will determine if temporary erosion control systems shown in the plan can be deleted, size of proposed ditch checks, proper methods of installation, and if additional temporary erosion controls shall be added which are not included in this plan. The Contractor shall perform all work as directed by the Engineer.

SITE DESCRIPTION

Description of Construction Activity:

1. The proposed project consists of constructing portland cement pavement, curb & gutter, sidewalks, storm sewer and other infrastructure for the X Subdivision along IL Y. The existing drainage structure across IL Y will be replaced with a precast double box culvert.
2. Soil disturbing activities will include clearing and stockpiling of topsoil, perimeter silt fencing and other erosion and sediment controls, realignment and shaping of ditches, storm sewer installation, placement of aggregate sub-base, concrete and bituminous pavement construction, final grading and other miscellaneous work to complete the improvements.

Intended Sequence of Major Construction Activities:

1. Mobilization and Construction Staking
2. Install Silt Fences and Temporary Erosion Control Measures
3. Install Entire Watermain and Sanitary Sewer
4. Install Storm Sewer
5. Remove and Stockpile Existing Topsoil
6. Pavement Removal and Excavation/Embankment to Designed Subgrade
7. Subgrade Compaction
8. Culvert Installation
9. Do Items 1. - 6. again for Stage 2, except Item 3.
10. Seed, Mulch, and Fertilize Within 14 Days After Final Grading
11. Final Cleanup and Demobilization

Area of Construction Site:

1. The total area of the construction site is estimated to be 2 acres in which 2 acres will be disturbed by excavation, grading or other activities. The developer is responsible for the 2 acres.

Other Reports, Studies and Plans which Aid in the Development of this Storm Water Pollution Prevention Plan as Referenced Documents:

1. Information on the soils within the site was obtained from SCS County soil map information, and site visits.
2. Site maps with drainage patterns and approximate slopes were contained in the hydrologic/hydraulic calculations prepared by the engineer and submitted to the municipality.

Drainage Tributaries Receiving Water from this Construction Site:

1. Tributaries to Shoal Creek

EROSION CONTROL PLAN
EXAMPLE VERBIAGE

FIGURE 34-4-A1

HENRY, MEISENHEIMER & GENDE, INC., 1075 LAKE RD., P.O. BOX 70, CARLYLE, ILLINOIS 62231 (618)-594-3711 WWW.HMGENGINEERS.COM

CERTIFICATION OF COMPLIANCE WITH FEDERAL, STATE AND LOCAL REGULATIONS

The storm water pollution prevention plan reflects Illinois Environmental Protection Agency and Illinois Soil and Water Conservation District's requirements for storm water management and erosion and sediment control. There are no other applicable local requirements for sediment and erosion site plans (or permits), or storm water management site plans (or permits).

CONTROLS - EROSION CONTROLS AND SEDIMENT CONTROLS

Stabilization Practices

1. Temporary Stabilization

   (a) Areas of existing vegetation (woods and grasslands) outside the proposed construction slope limits shall be identified for preserving and shall be protected from construction or other activities which would be detrimental to their maintenance and development.

   (b) Dead, diseased, or unsuitable vegetation within the site shall be removed as directed by the certifying Engineer, along with required tree removal.

   (c) As soon as reasonable access is available to all locations where water drains away from the project, sediment basins, temporary ditch checks, and/or erosion control fence shall be installed as called out in this plan and as directed by the certifying Engineer.

   (d) Bare and sparsely vegetated ground in highly erodible areas as determined by the certifying Engineer shall be temporarily seeded where no construction activities are expected within seven days.

   (e) Top soil stockpiles, earth stockpiles and disturbed portions of the site where construction activity temporarily ceases for at least twenty-one days shall be temporarily seeded no later than fourteen days from the last construction activity in that area.

   (f) Temporary erosion control items shall be removed as directed by the certifying Engineer after the item is no longer needed or it is no longer functioning.

2. Permanent Stabilization

   (a) Excavated areas, embankments and all other disturbed portions of the site where construction activity permanently ceases shall be stabilized with permanent seed no later than fourteen days after the last construction activity. This work shall be done in accordance with "Division V - Turfing" of the IDOT Standard Specifications.

   (b) All seeded areas shall be inspected at least one time each seven days and within 24 hours after a rainfall of 0.5" or greater.

   (c) The project shall be inspected by the certifying Engineer on a bi-weekly basis to determine that erosion control efforts are in place and effective and if other control work is necessary.

Structural Practices

1. Perimeter barriers, ditch checks, inlet/pipe protection and/or sediment basins shall be constructed at all locations as indicated in the plans and at any additional location as directed by the certifying Engineer.
2. Temporary riprap ditch checks will be allowed to remain in place where approved by the certifying Engineer.
3. Sediment collected during construction by the various temporary erosion control systems shall be disposed of on a regular basis as directed by the certifying Engineer.

Storm Water Management

1. Storm water management will be provided by drainage ditches, swales, storm sewers, and catch basins for the site. The areas will be graded to drain and have permanent seeding.

OTHER CONTROLS

Waste Disposal

1. Waste Materials - All waste materials will be collected and stored in containers with lids and will be disposed of by a licensed solid waste company. The containers will meet all state and local solid waste management regulations. All trash and construction debris from the site will be deposited in the containers. The containers will be emptied and the trash hauled offsite on an as-needed basis or as directed by the Engineer. No construction waste materials will be buried onsite. All personnel will be instructed regarding the correct procedure for waste disposal and a notice stating these practices will be posted in the Contractor's office trailer.

EROSION CONTROL PLAN
EXAMPLE VERBIAGE

FIGURE 34-4-A2

HENRY, MEISENHEIMER & GENDE, INC., 1075 LAKE RD., P.O. BOX 70, CARLYLE, ILLINOIS 62231 (618)-594-3711 WWW.HMGENGINEERS.COM

OTHER CONTROLS (continued)

Waste Disposal

2. Hazardous Waste - All hazardous waste materials shall be disposed of in the manner specified by state or local regulations or by the Manufacturer's Material Safety Data Sheet (MSDS). Site personnel will be instructed regarding the correct procedure for hazardous waste disposal.

3. Sanitary Waste - All sanitary waste will be collected from any portable units a minimum of once per week by a licensed sanitary waste management contractor, as required by local regulations.

Offsite Vehicle Tracking

1. If deemed necessary, a vehicle wash off area with yard hydrants will be provided to help reduce vehicle tracking of sediments. The streets will be swept daily to remove any excess mud, dirt or rock tracked from the site. The Contractor shall provide all measures required by IDOT for accessing public roads by construction vehicles.

TIMING OF CONTROLS/MEASURES

As indicated in the sequence of major activities, the silt fencing and other temporary erosion controls will be constructed prior to clearing or grading of any other portions of the site. Areas where construction activity temporarily ceases for more than twenty-one days will be stabilized with a temporary seed and mulch within fourteen days of the last disturbance. Once construction activity ceases permanently in an area, that area will be stabilized with permanent seed and mulch as per the specifications. All accumulated sediment will be removed and the area will be monitored and maintained until stabilized.

MAINTENANCE/INSPECTION PROCEDURES

These are the inspection and maintenance practices that will be used to maintain erosion and sediment controls:

1. All control measures shall be inspected by the certifying Engineer on a bi-weekly basis and following any storm event of 0.5" or greater.
2. All measures will be maintained in good working order; if a repair is necessary, it will be initiated within 24 hours of the report.
3. Built-up sediment will be removed from silt fence when it has reached one-quarter the height of the fence.
4. Silt fence will be inspected for depth of sediment, tears, if fabric is securely attached to posts, and if posts are firmly embedded in the ground.
5. Sediment traps and ditch checks will be inspected for depth of sediment and secured placement. Built-up sediment will be removed when it reaches the maximum allowable sediment level or at the direction of the certifying Engineer.
6. All ditches will be inspected and any breaches promptly repaired.
7. Temporary and permanent seeding will be inspected for bare spots, washouts, rills, cuts and healthy growth.
8. The Contractor shall have two individuals who will be responsible for inspections, maintenance and repair activities, and filling out the inspection and maintenance report. The Engineer shall verify all inspections, maintenance and repair activities.
9. A maintenance inspection report in accordance with Part IV.D.4.b. of the general permit shall be made and kept on file by the Contractor as part of the plan for at least three years after the date of inspection. The report shall be signed in accordance with Part VI.G of the general permit.
10. If any violation of the provisions of this plan is identified during the conduct of the construction work covered by this plan, the certifying Engineer shall complete and file a "Incident of Noncompliance (ION)" report for the identified violation. The certifying Engineer shall use forms provided by the Illinois Environmental Protection Agency and shall include specific information on the noncompliance, actions which were taken to prevent any further causes of noncompliance, and a statement detailing any environmental impact which may have resulted from the noncompliance.

INVENTORY FOR POLLUTION PREVENTION PLAN

The materials or substances listed below are expected to be present onsite during construction:

1. Concrete	5. Cleaning Solvents
2. Detergents	6. Wood
3. Fertilizers	7. Lime
4. Paints	8. Petroleum Based Products

EROSION CONTROL PLAN
EXAMPLE VERBIAGE

FIGURE 34-4-A3

SPILL PREVENTION

Material Management Practices The following will be used to reduce the risk of spills or other accidental exposure of materials and substances to storm water runoff:

1. Good Housekeeping - The following good housekeeping practices will be followed onsite during the construction project:

   (a) Effort to store only enough product required to do the job.

   (b) Materials stored in a neat, orderly manner in their appropriate containers.

   (c) Products kept in original containers with original manufacturer's labels.

   (d) Materials not mixed with one another unless recommended by the manufacturer.

   (e) All of a product will be used up before disposing of the container.

   (f) Manufacturer's recommendations for proper use and disposal will be followed.

2. Hazardous Products - These practices are used to reduce the risks associated with hazardous materials:

   (a) Products will be kept in original containers unless they are not resealable.

   (b) Original labels and Material Safety Data Sheets (MSDS) will be retained.

   (c) If surplus product must be disposed of, manufacturer's or local and state recommended methods for proper disposal will be followed.

Product Specific Practices The following practices will be followed onsite:

1. Petroleum Products - All onsite vehicles will be monitored for leaks and receive regular preventative maintenance to reduce the chance of leakage. Petroleum products will be stored in tightly sealed containers which are clearly labeled. Construction equipment shall be stored and fueled only at designated locations. All necessary measures shall be taken to contain any fuel or pollution run-off in compliance with EPA water quality regulations. Leaking equipment or supplies shall be immediately repaired or removed from the site.

2. Fertilizers - All fertilizers used will be applied only in the minimum amounts recommended by the manufacturer. Once applied, fertilizer will be worked into the soil to limit exposure to storm water runoff. Storage will be in a covered area. The contents of any partially used bags of fertilizer will be transferred to a sealable plastic bin to avoid spills.

3. Paints - All containers will be tightly sealed and stored when not required for use. Excess paint will not be dumped on the ground or discharged to the storm sewer system, but will be properly disposed of according to manufacturer's instructions or applicable state or local regulations.

4. Concrete Trucks - Concrete trucks will not be allowed to wash out or discharge surplus concrete or drum wash water onsite unless in an approved holding basin.

STORM WATER POLLUTION PREVENTION PLAN CERTIFICATION

I certify under penalty of law that this document and all attachments were prepared under my direction or supervision in accordance with a system designed to assure that qualified personnel gathered and evaluated the information submitted. Based on my inquire of the person(s) who manage the system, or those persons directly responsible for gathering the information, the information submitted herein, is, to the best of my knowledge and belief, true, accurate, and complete. I am aware that there are significant penalties for submitting false information, including the possibility of fine and imprisonment for knowing violations.

Signed: _____ Date: _____

CONTRACTOR'S CERTIFICATION

A Contractor's Certification Signature Sheet equal to that of the IDOT Special Provisions and is hereby made part of the Plan. The Contractor shall sign and date the certification sheet and it shall be on file near the job site at all times.

EROSION CONTROL PLAN
EXAMPLE VERBIAGE

FIGURE 34-4-A4

HENRY, MEISENHEIMER & GENDE, INC., 1075 LAKE RD., P.O. BOX 70, CARLYLE, ILLINOIS 62231 (618)-594-3711 WWW.HMGENGINEERS.COM

CITY OF BREESE

MUNICIPAL STANDARD DETAILS

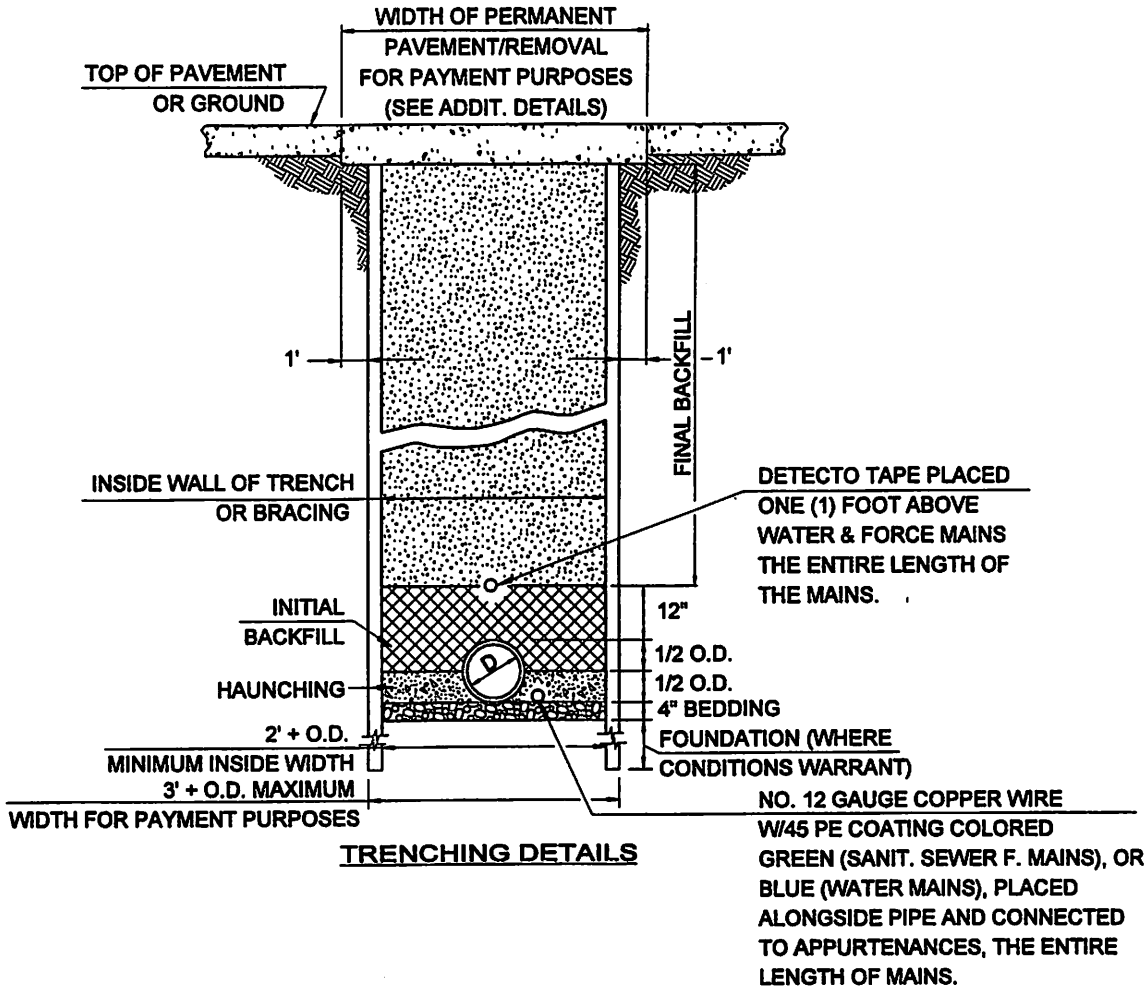

TRENCHING DETAILS

	SANIT. SEWER MAINS & LATERALS		SANIT. SEWER FORCE MAINS		WATER MAINS & SERVICES		STORM SEWERS - RCP		STORM SEWERS - PLASTIC	
	UNDER PAVT.	UNDER EARTH	UNDER PAVT.	UNDER EARTH	UNDER PAVT.	UNDER EARTH	UNDER PAVT.	UNDER EARTH	UNDER PAVT.	UNDER EARTH
	CA-7	CA-7	CA-7	*	CA-7	*	CA-7 OR CA-6	CA-7 OR CA-6	CA-6	CA-6
	CA-7	CA-7	CA-7	*	CA-7	*	CA-7 OR CA-6	CA-7 OR CA-6	CA-6	CA-6
	CA-7	*	CA-7	*	CA-7	*	CA-7 OR CA-6	*	CA-6	CA-6
	CA-7	*	CA-7	*	CA-7	*	CA-7 OR CA-6	*	CA-6	*

*CASE I BACKFILL FREE FROM ORGANICS.
IDOT TRENCH BACKFILL, USED FOR STORM SEWERS, SHALL BE AS SHOWN ABOVE AND NO FA-# MATERIAL WILL BE ALLOWED.
CA-6 MAY BE USED IN LIEU OF CA-7 FOR PIPES OTHER THAN STORM SEWERS, WITH MECHANICAL TAMPING COMPACTION THROUGHOUT.
OTHER UTILITIES, DEPENDING ON TYPE AND SIZE, MAY REQUIRE MODIFICATIONS TO THE ABOVE.

UTILITY TRENCHING DETAILS

FIGURE 34-4-B1

CADD FILE: server/5662/breesecodepvt34-4-B1.dgn Feb. 20, 2008

CITY OF BREESE

MUNICIPAL STANDARD DETAILS

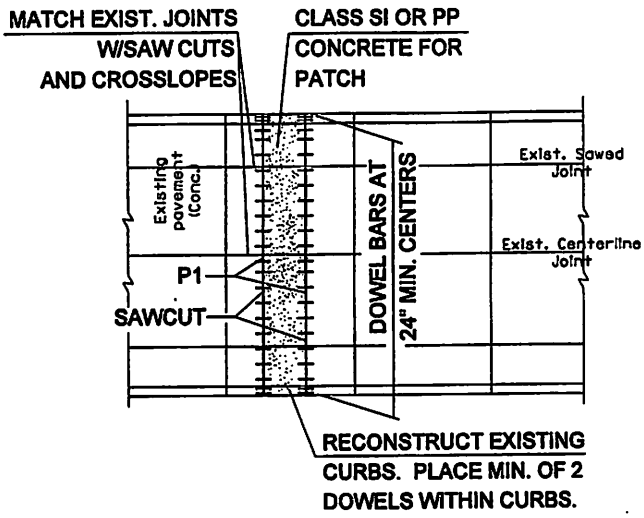

DETAILS FOR CONCRETE PAVEMENT

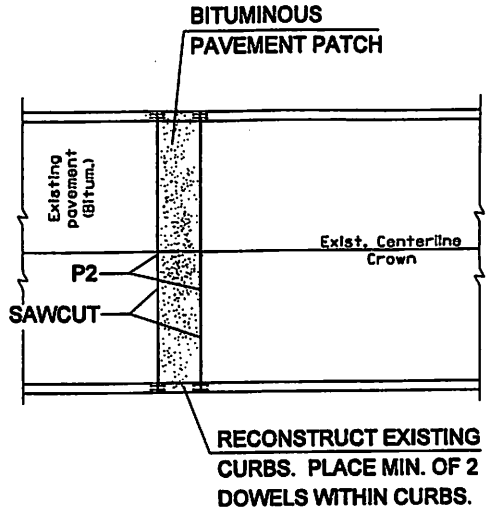

DETAILS FOR BITUMINOUS PAVEMENT

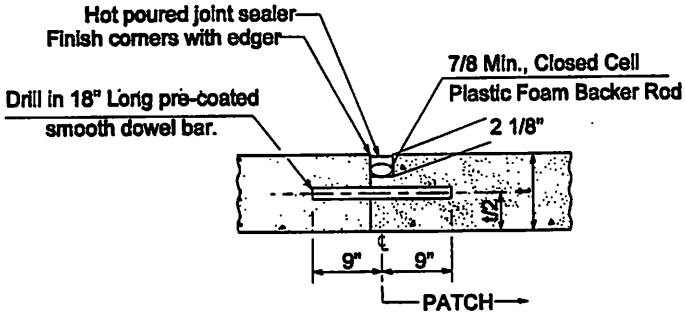

P1-PATCHING TRANSVERSE JOINT

CONCRETE THICKNESS	DOWEL BAR DIAMETER
8" or greater	1 1/2"
7" thru 8"	1 1/4"
Less than 7"	1"

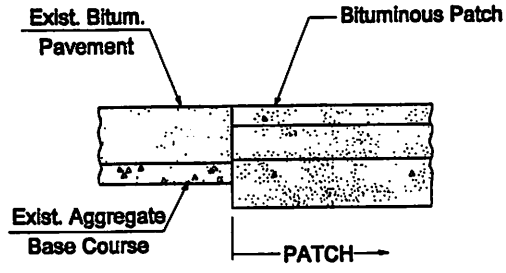

P2-PATCHING TRANSVERSE JOINT

The top 3" of the Bitum. Patch must be Hot-Mix Asphalt Surface Course, Mix. C. A minimum 3" of HMA Base Course required beneath Surface Course. A minimum 5" of Sub-base Course of HMA Base Course or Bituminous Aggregate Mixture must be placed below the Base Course.

UTILI PATCHING DETAILS

FIGURE 34-4-B2

CADD FILE: server/5662/breesecodepvt34-4-B2.dgn Feb. 20, 2006

CITY OF BREESE

MUNICIPAL STANDARD DETAILS

HOME OR BUSINESS OWNER SHALL BE RESPONSIBLE FOR THEIR OWN SERVICE CONNECTION FOLLOWING SUBDIVISION ACCEPTANCE INCLUDING PAVEMENT REPAIRS.

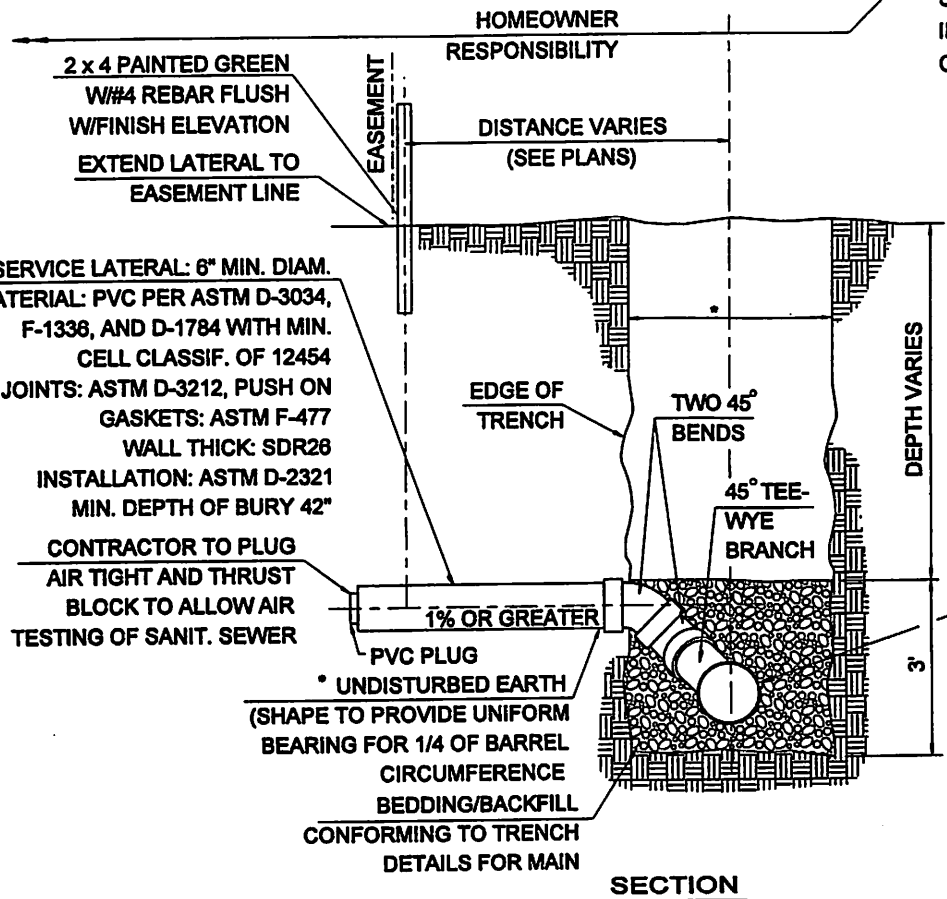

TEE-WYE BRANCH SERVICE CONNECTION:
8" x 8" x 6" PVC D-3034 MOLDED SADDLE TEE-45 DEG. WYES W/GASKETED BRANCH CONFORMING TO ASTM 679 AND SOLVENT WELDED SKIRTS HELD IN PLACE W/ALL STAINLESS STEEL ADJUSTABLE BAND CLAMPS.
W/MAIN MATERIAL OTHER THAN PVC, USE MECHANICALLY CUT HOLES AND SADDLES AS ABOVE, EXCEPT A NON-HARDENING GASKET, SILICONE CAULKED IN PLACE SHALL BE USED.

SANITARY MAIN: 8" MIN. DIAM
MATERIAL: PVC PER ASTM D-3034, F-1336, AND D-1784 WITH MIN. CELL CLASSIF. OF 12454.
JOINTS: ASTM D-3212, PUSH-ON GASKETS: ASTM F-477
WALL THICK.: SDR 26
INSTALLATION: ASTM D-2321
MIN. BURY DEPTH OF 42"

SECTION

*UTILIZE CA-7 FOR ALL BEDDING, HAUNCHING, AND INITIAL BACKFILL AND CA-7 FINAL BACKFILL WHERE THE EDGE OF THE TRENCH IS WITHIN TWO (2) FEET OF A PERMANENT SURFACE, INCLUDING DRIVEWAYS AND SIDEWALK. USE CASE I BACKFILL FREE FROM ORGANICS AT ALL OTHER LOCATIONS

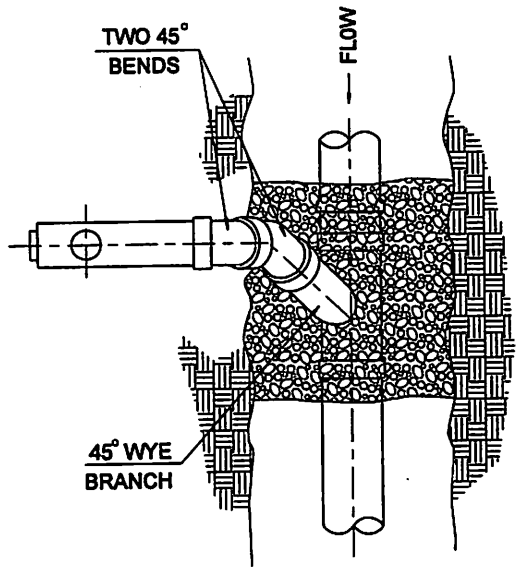

PLAN

SANITARY SEWER MAINS & SERVICE CONNECTIONS

FIGURE 34-4-B3

CADD FILE: server/5662/breesecodepvt34-4-B3.dgn Feb. 20, 2006

CITY OF BREESE

MUNICIPAL STANDARD DETAILS

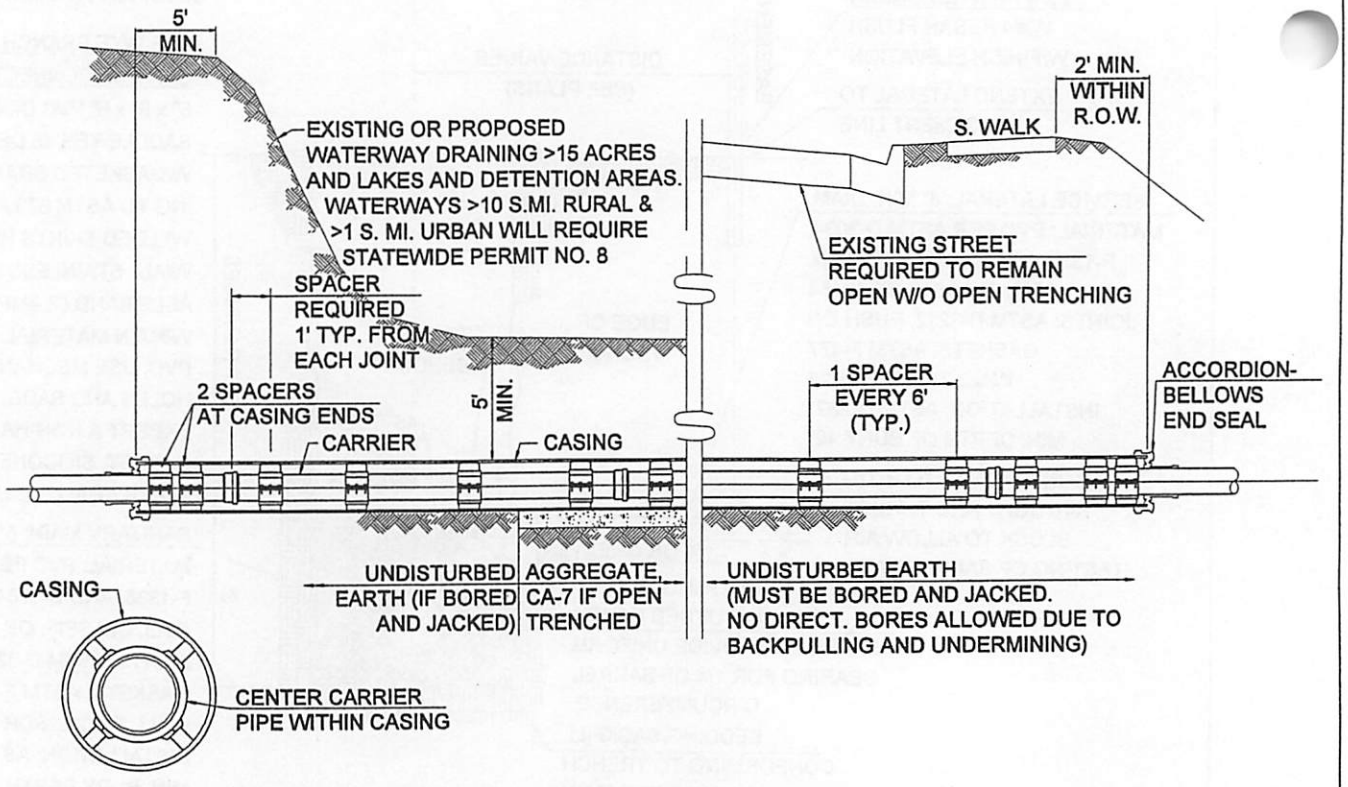

CASING PIPE:

ASTM A139, GRADE B, 35,000 PSI
BURST PRESSURE STEEL, 18' MIN. LENGTHS,
SOLID BUTT WELDS, MIN. 3/8" THICKNESS <36" O.D.,
MIN. 5/8" THICKNESS >36" O.D.; EXTERIOR COATED
WITH COAL TAR EPOXY OR BITUM. ASPHALT.

CASING PIPE DIAMETER TO BE DETERMINED BY
THE CARRIER PIPE DIAMETER AND THE REQUIRED
END SEAL DIAMETERS BY PSI CORPORATION.

CARRIER PIPE:

SANITARY SEWER, BOTH GRAVITY AND FORCE
MAIN, SHALL HAVE RESTRAINED JOINTS TO ALLOW
FOR REMOVAL OF CARRIER PIPE, PER ASTM 2241.

NOTE: SERVICE LATERALS SHALL REQUIRE SAME
DETAILS AS FOR MAINS.

WATER MAINS SHALL HAVE RESTRAINED JOINTS
TO ALLOW FOR REMOVAL. C900 OR C905 PVC, DUCTILE
IRON BALL & SOCKET, OR HIGH DENSITY P.E. PIPE
WITH RESTRAINED JOINTS MAY BE USED.
(CERTA-LOK IS ACCEPTABLE)

CASING SPACERS:

MODEL S8G-2 OR S12G-2 BY PSI CORPORATION.
(USE S8G-2 WHEN CARRIER PIPE IS LESS THAN 12" I.D.)
CENTER-RESTRAINED

ACCORDION-BELLOWS END SEAL:

MODEL "S" END SEALS BY PSI CORPORATION.
NEOPRENE W/ S.S. WORM GEAR SCREW
STAINLESS STEEL BANDS TO BE UTILIZED
TO PREVENT CORROSION.

SANITARY SEW
& WATER MAIN WATERWAY
ENCASEMENT REQUIREMENTS

FIGURE 34-4-B4

CADD FILE: server/5662/breesecodepvt34-4-B4.dgn Feb. 20, 2006

CITY OF BREESE

MUNICIPAL STANDARD DETAILS

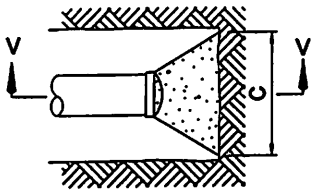

PLAN

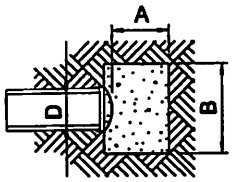

SECTION "V-V"
THRUST BLOCK
FOR CAPS

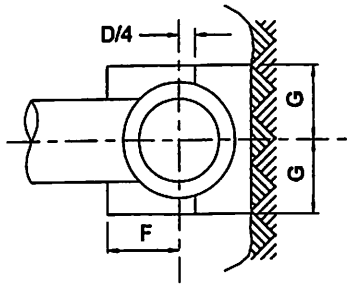

PLAN

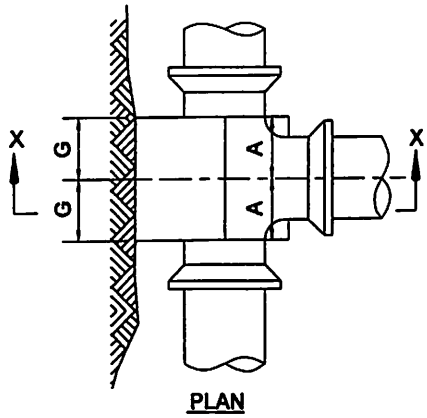

PLAN

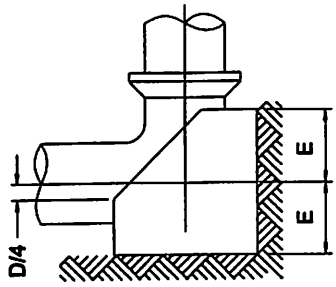

ELEVATION
THRUST BLOCK
FOR VERTICAL ELBOW

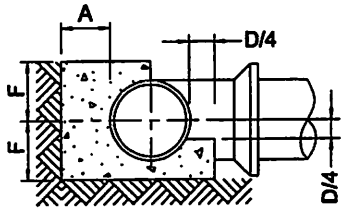

SECTION "X-X"
THRUST BLOCKS FOR TEES

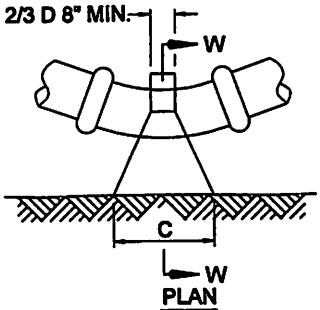

PLAN

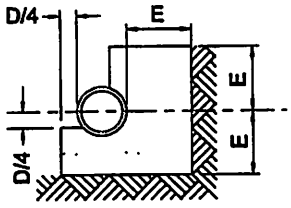

SECTION "W-W"
THRUST BLOCK FOR
HORIZONTAL BEND

			THRUST BLOCK DIMENSIONS							
D	A	B	C	E	F	G	H	J	K	L
4" & 6"	8"	11"	1'-3"	8"	8"	8"	3"	2'-6"	2'-6"	3'-0"
8"	9"	1'-2"	1'-8"	9"	10"	9"	3"	3'-0"	2'-9"	4'-0"
10"	10"	1'-6"	2'-1"	10"	1'-0"	1'-0"	3"	4'-0"	3'-0"	4'-6"
12"	1'-0"	1'-8"	2'-6"	11"	1'-3"	1'-0"	3"	4'-6"	3'-6"	4'-9"
16"	1'-2"	2'-4"	3'-4"	1'-3"	1'-8"	1'-4"	4"	5'-2"	4'-0"	6'-6"
20"	1'-3"	3'-0"	4'-2"	1'-6"	2'-1"	1'-9"	4"	5'-6"	4'-9"	8'-0"
24"	1'-4"	3'-6"	5'-0"	1'-8"	2'-6"	2'-0"	5"	6'-0"	5'-6"	9'-6"

MINIMUM REQUIRED BEARING DIMENSIONS.

NOTES:

1. CARRY ALL CONC. BLOCKS TO SOLID GROUND UNLESS OTHERWISE NOTED.
2. USE IDOT CLASS SI CONCRETE.
3. VISQUEEN TYPE PLASTIC TO BE PLACED BETWEEN FITTINGS AND POURED CONCRETE.
4. DO NOT POUR CONCRETE AROUND FLANGES AND BOLTS.

SANITARY SEWER FORCE MAIN
& WATER MAIN
THRUST BLOCKING REQUIREMENTS

FIGURE 34-4-B5

CADD FILE: server/5662/breesecodepvt34-4-B5.dgn Feb. 20, 2006

HENRY, MEISENHEIMER & GENDE, INC., 1075 LAKE RD., P.O. BOX 70, CARLYLE, ILLINOIS 62231 (618)-594-3711 WWW.HMGENGINEERS.COM

CITY OF BREESE

MUNICIPAL STANDARD DETAILS

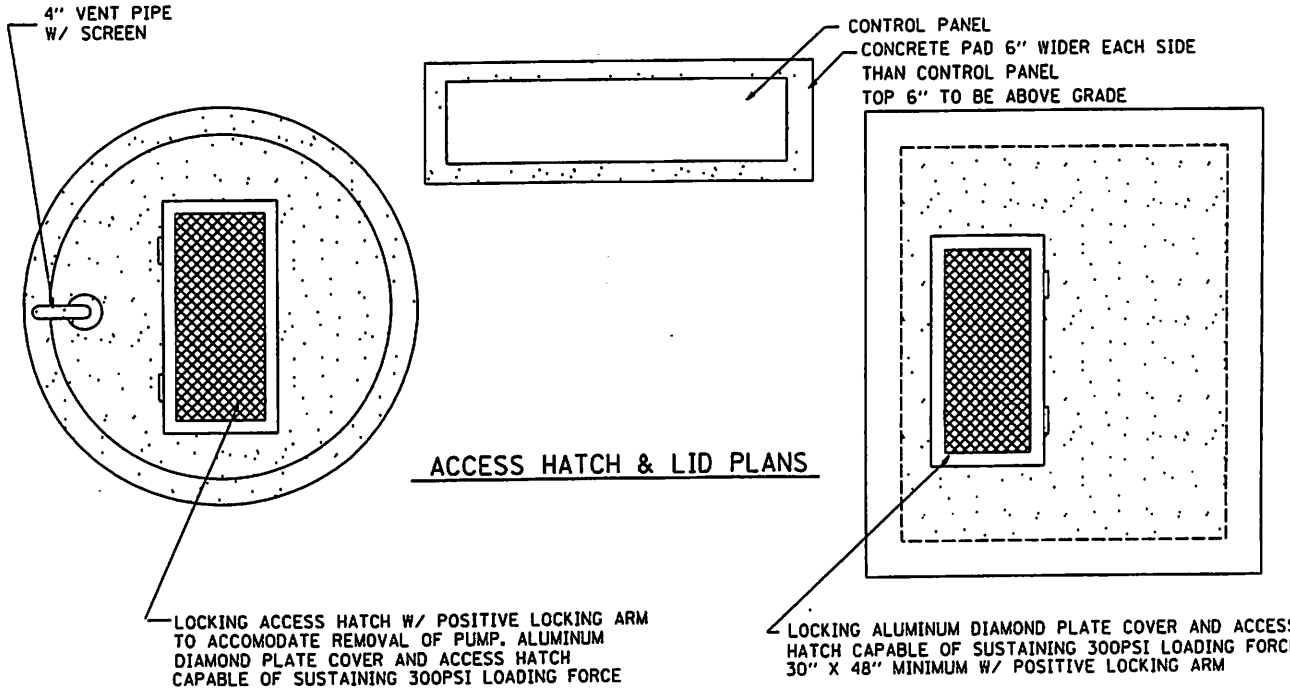

ACCESS HATCH & LID PLANS

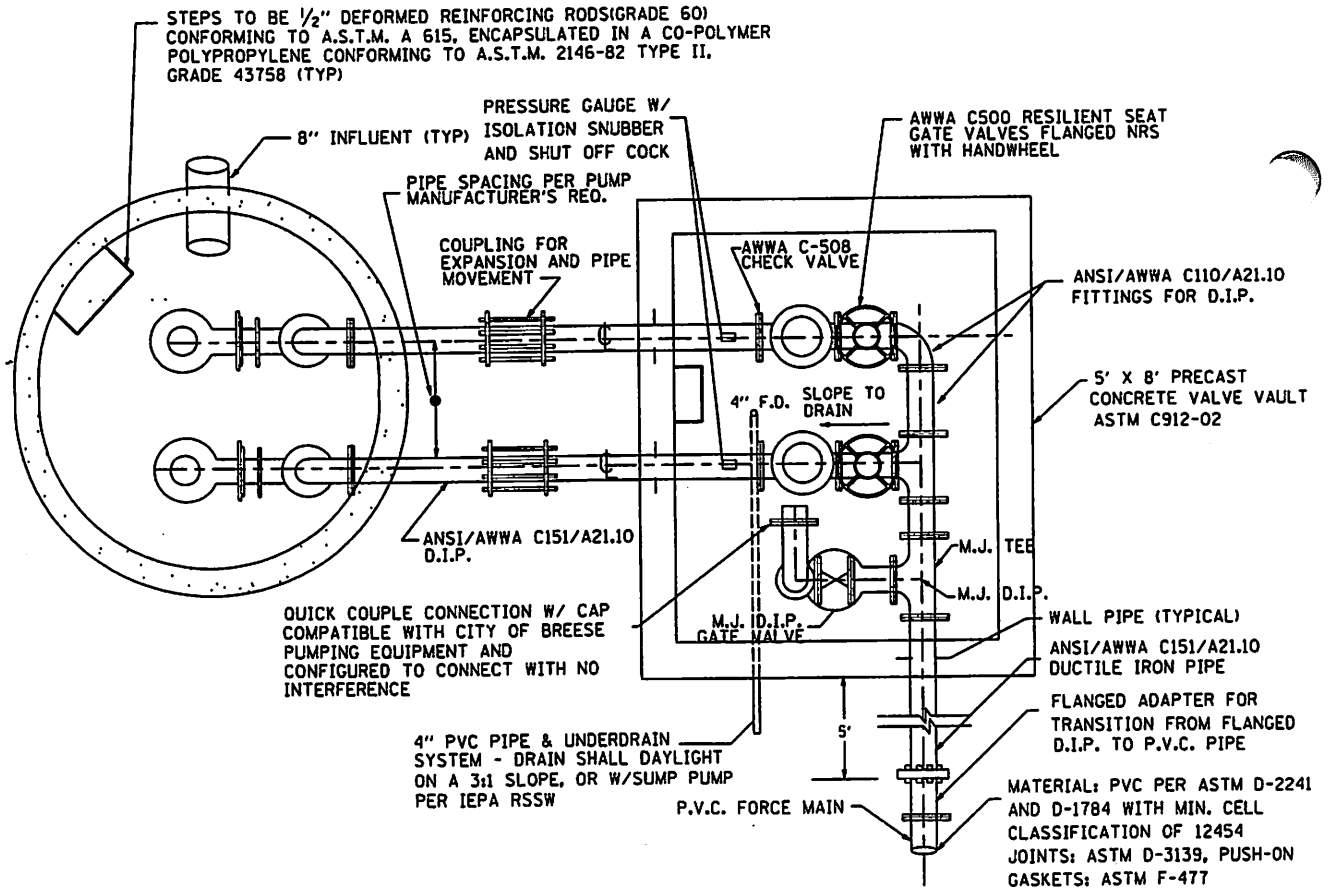

PIPING PLAN

NOTES:

1. DETAILS SHOWN ARE GENERAL AND NOT ALL INCLUSIVE.
2. CONSTRUCTION AND INSTALLATION SHALL BE PER ILLINOIS STANDARD SPECIFICATIONS FOR WATER AND SEWER MAIN CONSTRUCTION IN ILLINOIS. CONCRETE SHALL BE CAST OR PRE-CAST ONLY IN ACCORDANCE WITH ASTM C478.
3. ALL SANITARY SEWER MANHOLES, VALVE VAULTS, AND LIFT STATIONS SHALL BE VACUUM TESTED PER ASTM C1244 CURRENT EDITION, EXCEPT THAT THE TEST HEAD SHALL BE PLACED ON TOP OF MANHOLE FRAMES AND NOT THE CONCRETE FOR THE TEST.

SANITARY SEW
GENERAL LIFT STATION
PLAN DETAILS

FIGURE 34-4-B6

CADD FILE: server/5662/breesecodepvt34-4-B6.dgn Feb. 24, 2006

HENRY, MEISENHEIMER & GENDE, INC., 1075 LAKE RD., P.O. BOX 70, CARLYLE, ILLINOIS 62231 (618)-594-3711 WWW.HMGENGINEERS.COM

CITY OF BREESE

MUNICIPAL STANDARD DETAILS

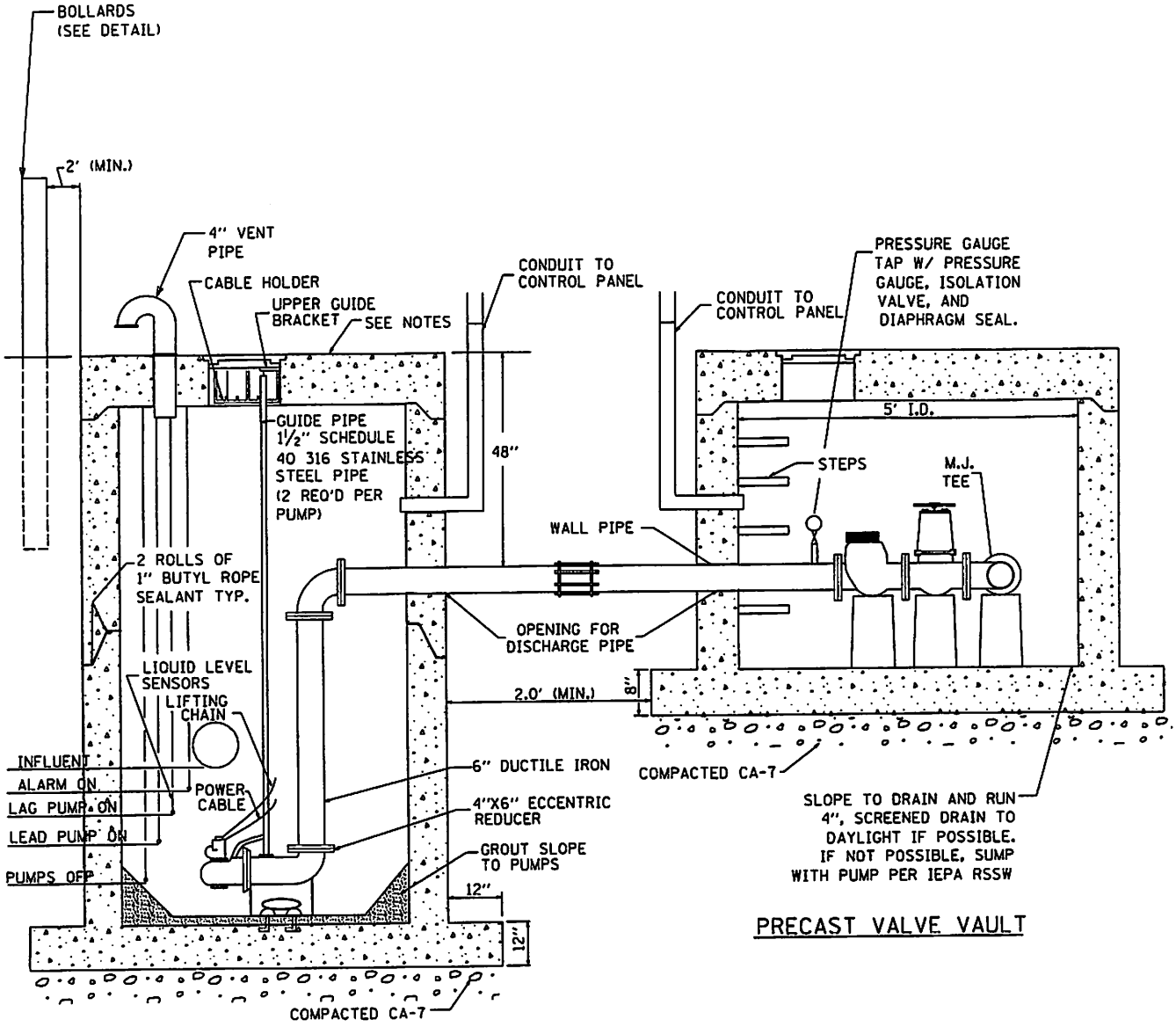

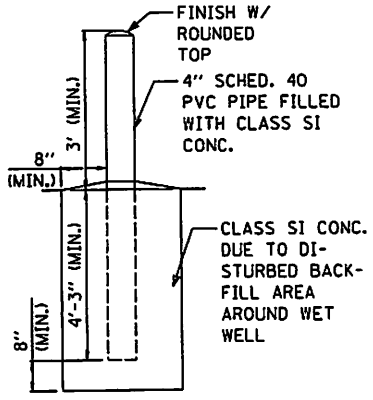

BOLLARD

(PLACE A MINIMUM OF 3 BOLLARDS AROUND WET WELL)

NOTES:

1. DETAILS SHOWN ARE GENERAL AND NOT ALL INCLUSIVE.
2. CONSTRUCTION AND INSTALLATION SHALL BE PER ILLINOIS STANDARD SPECIFICATIONS FOR WATER AND SEWER MAIN CONSTRUCTION IN ILLINOIS. CONCRETE SHALL BE CAST OR PRE-CAST ONLY IN ACCORDANCE WITH ASTM C478.
3. ELECTRICAL SYSTEM AND COMPONENTS SHALL COMPLY WITH N.E.C. REQUIREMENTS FOR CLASS 1, GROUP "D", DIVISION 1 LOCATIONS.
4. MOTOR CONTROL CENTER SHALL BE LOCATED OUTSIDE AND PROTECTED BY CONDUIT SEALS.
5. MOTOR SHALL BE REMOVED AND DISCONNECTED WITHOUT DISRUPTING THE SEAL.
6. LIFT STATION TOP OF SLAB SHALL BE AT LEAST 12" LOWER THAN LOWEST CONNECTED BASEMENT FLOOR.
7. ALL SANITARY SEWER MANHOLES, VALVE VAULTS, AND LIFT STATIONS SHALL BE VACUUM TESTED PER ASTM C1244 CURRENT EDITION, EXCEPT THAT THE TEST HEAD SHALL BE PLACED ON TOP OF MANHOLE FRAMES AND NOT THE CONCRETE FOR THE TEST.

SANITARY SEWER
GENERAL LIFT STATION
SECTION DETAILS

FIGURE 34-4-B7

CADD FILE: server/5662/breesecodepvt34-4-B7.dgn Feb. 24, 2008

HENRY, MEISENHEIMER & GENDE, INC., 1075 LAKE RD., P.O. BOX 70, CARLYLE, ILLINOIS 62231 (618)-594-3711 WWW.HMGENGINEERS.COM

CITY OF BREESE

MUNICIPAL STANDARD DETAILS

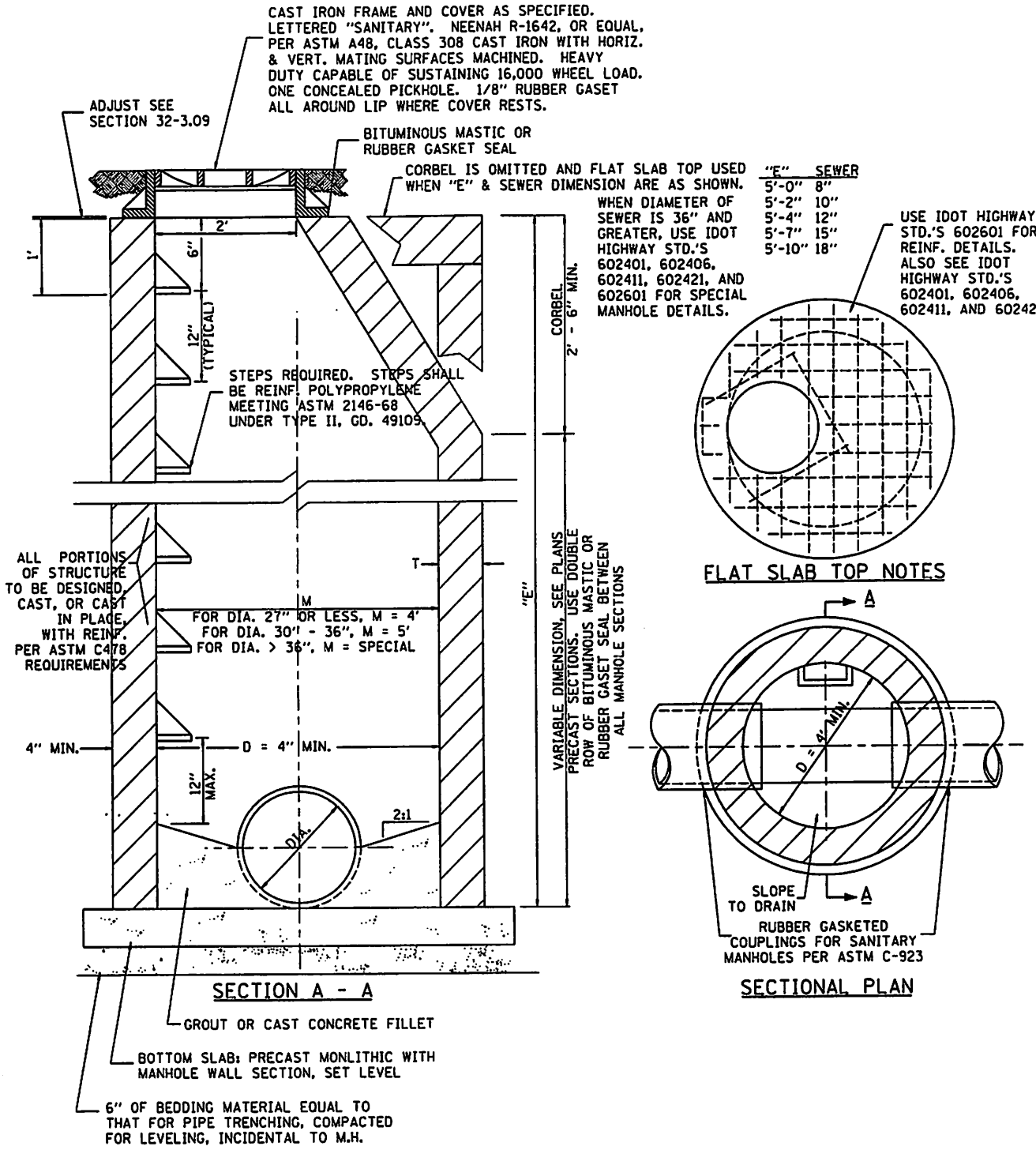

NOTES:

1. CONSTRUCTION AND INSTALLATION SHALL BE PER ILLINOIS STANDARD SPECIFICATIONS FOR WATER AND SEWER MAIN IN ILLINOIS, CURRENT EDITION.

2. ONLY CAST-IN-PLACE OR PRECAST MANHOLES ARE ALLOWED DUE TO INFILTRATION. "T" DIMENSION SHALL BE AS PER ASTM C478 AND IDOT HIGHWAY STANDARDS. ALL CONCRETE, AND CONSTRUCTION SHALL BE PER IDOT STANDARD SPECIFICATIONS FOR ROAD AND BRIDGE CONST.

3. STD. SPECS. REFER TO "A" AS ONE WITHOUT FLAT SLAB TOP. "B" REFERS TO THOSE WITH SQUARE SECTION AROUND LARGE DIAMETER PIPE (36" & GREATER), AND "C" REFERS TO SHALLOW MANHOLES WITH FLAT SLAB TOP. THESE NOMENCLATURES ARE HEREIN MODIFIED WITH REFERENCE TO THE STD. SPECS. FOR WATER & SEWER MAIN CONSTRUCTION AND THE IDOT HIGHWAY STANDARDS. CIRCULAR SECTIONS AROUND LARGE DIAMETER PIPE (PER IDOT SPECIFICATIONS) REQUIRED RATHER THAN SQUARE SECTION OF THE STD. SPECS. FOR WATER & SEWER FOR TYPE "B".

4. ALL SANITARY SEWER MANHOLES, VALVE VAULTS, AND LIFT STATIONS SHALL BE VACUUM TESTED PER ASTM C1244 CURRENT EDITION, EXCEPT THAT THE TEST HEAD SHALL BE PLACED ON TOP OF MANHOLE FRAMES AND NOT THE CONCRETE FOR THE TEST.

SANITARY SEWER MANHOLE DETAILS

FIGURE 34-4-B8

CADD FILE: server/5662/breesecodepvt34-4-B8.dgn

HENRY, MEISENHEIMER & GENDE, INC. 1075 LAKE RD. P.O. BOX 70. CARLYLE, ILLINOIS 62231 (618)-594-3711 WWW.HMGENGINEERS.COM

CITY OF BREESE

MUNICIPAL STANDARD DETAILS

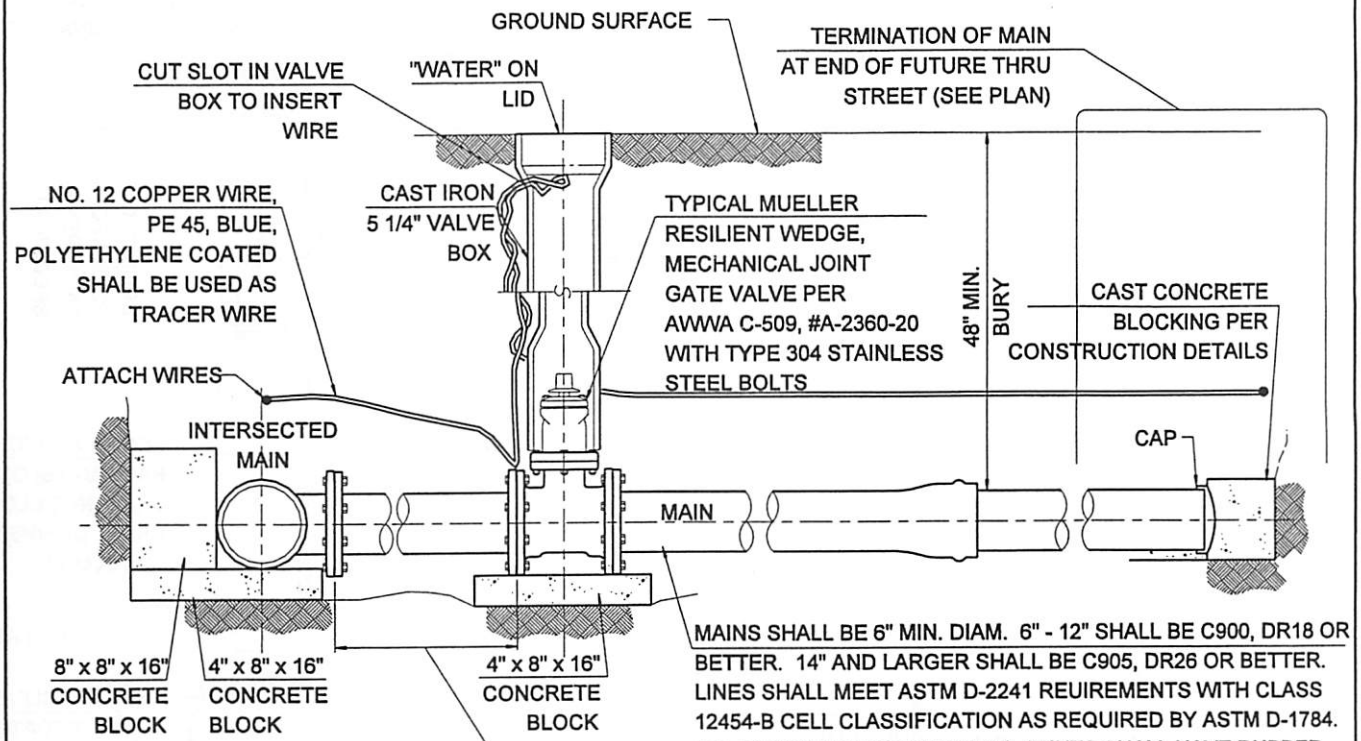

MAINS SHALL BE 6" MIN. DIAM. 6" - 12" SHALL BE C900, DR18 OR BETTER. 14" AND LARGER SHALL BE C905, DR26 OR BETTER. LINES SHALL MEET ASTM D-2241 REUIREMENTS WITH CLASS 12454-B CELL CLASSIFICATION AS REQUIRED BY ASTM D-1784. ALL PUSH ON OR MECHANICAL JOINTS SHALL HAVE RUBBER (SBR) GASKETS MEETING ASTM D3139. GASKETS SHALL CONFORM TO AWWA C111. FITTINGS SHALL BE DUCTILE IRON, MECHANICAL JOINT, CEMENT MORTAR LINED CONFORMING TO AWWA C110, C104, & C151 (TAR COATING).

DUCTILE IRON COUPLINGS WHERE MAINS INTERSECT AT A TEE (AS SHOWN) AND THE VALVE IS ON THE SAME SIDE OF THE STREET AS THE INTERSECTED MAINS AND WHERE TEES ARE WITHIN 2' FROM VALVES

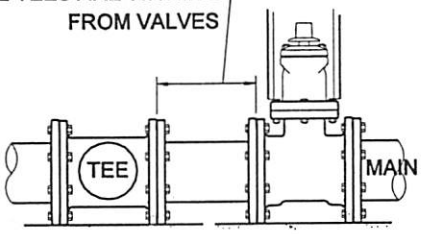

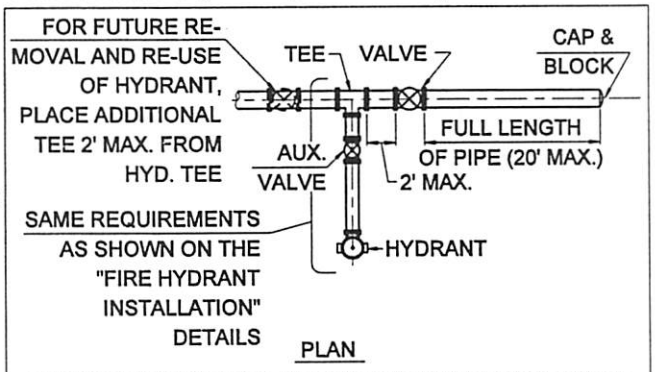

TERMINATION OF MAIN AT END OF FUTURE THRU STREET

NOTES

1. EXECUTION SHALL BE IN CONFORMANCE WITH THE LATEST EDITION OF THE ILLINOIS STANDARD SPECIFICATIONS FOR WATER AND SEWER MAIN CONSTRUCTION AND THE CITY OF WATERLOO CONSTRUCTION DETAILS.
2. MECHANICAL JOINT FITTINGS SHALL BE USED TO ROUTE WATER MAINS AROUND CUL-DE-SACS AND WHEN VERTICAL OR HORIZONTAL ALIGNMENTS OF PIPE EXCEED DEFLECTIONS ALLOWED. MAXIMUM DEFLECTION SHAL BE ACHEIVED AT JOINTS AND NOT ALONG PIPES.
3. WATER MAIN VALVE BOXES SHALL NOT BE INSTALLED IN DRIVEWAYS, SIDEWALKS, AND STREET CURBING.
4. ALL BLOCKING OF WATER MAIN FITTINGS, VALVES, AND HYDRANTS SHALL BE SOLID CONCRETE BLOCKING WITH OAK WEDGES.
5. MECHANICAL RESTRAINT DEVICES APPROVED BY THE CITY SHALL BE USED ON ALL MECHANICAL JOINT DUCTILE IRON FITTINGS.
6. TAPPING SLEEVES (HOT TAPS) SHALL REQUIRE STAINLESS STEEL MUELLER #H-304 OR FORD #FTSS AND/OR MECHANICAL JOINT TAPPING SLEEVE #H-615.
7. ALL MAINS SHALL BE TESTED AT 150 PSI FOR FOUR (4) HOURS AND SHALL BE WITNESSED BY THE CITY USING A CHART FURNISHED BY THE CITY.
8. A MAGNESIUM 5 LB. H-1 (GRADE A) ANODE SHALL BE ATTACHED WITH DIRECT BURY SPLICE KIT, TO TRACER WIRE. THE SPLICE KIT SHALL BE A 3M DBR KIT.

FIGURE 34-4-C1

CADD FILE: server/5662/breesecodepvt34-4-C1.dgn

CITY OF BREESE

MUNICIPAL STANDARD DETAILS

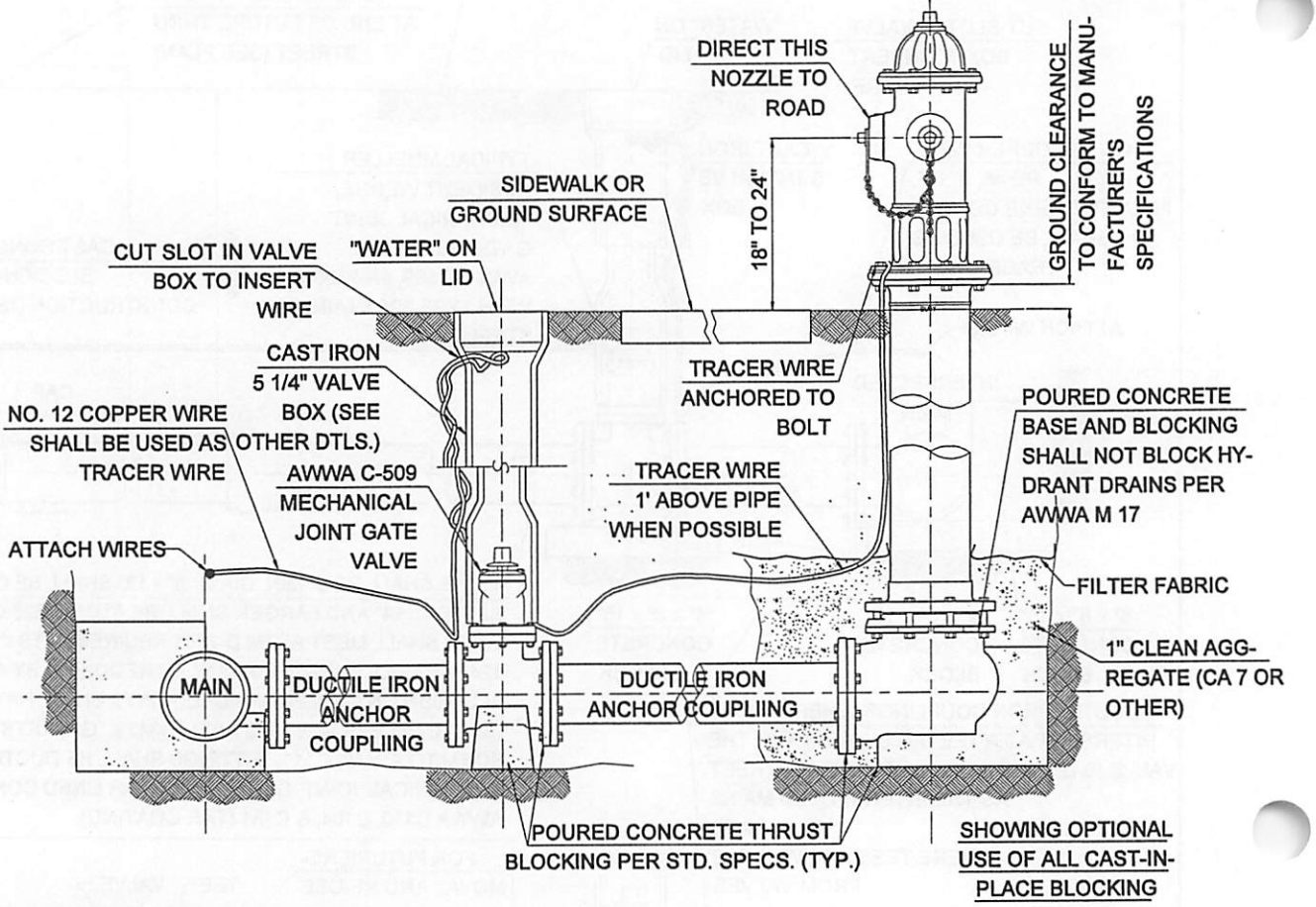

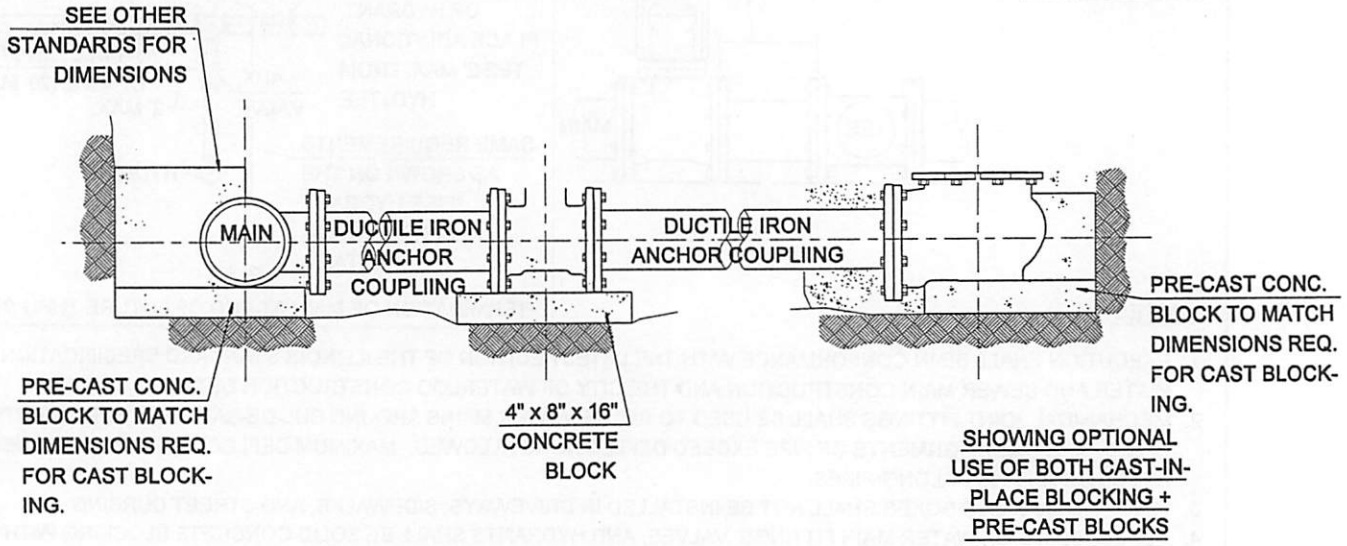

NOTES

1. EXECUTION SHALL BE IN CONFORMANCE WITH THE LATEST EDITION OF THE ILLINOIS STANDARD SPECIFICATIONS FOR WATER AND SEWER MAIN CONSTRUCTION, IEPA REQUIREMENTS, AND THE ILLINOIS PLUMBING CODE.
2. VISQUEEN TYPE PLASTIC TO BE PLACED BETWEEN FITTINGS AND POURED CONCRETE.
3. DO NOT POUR CONCRETE AROUND FLANGES AND BOLTS.
4. ANODE TO BE ATTACHED WITH DIRECT BURY SPLICE KIT, TO TRACER WIRE.

FIRE HYDRANT INSTALLATION

FIGURE 34-4-C2

CADD FILE: server/5662/breesecodepvt34-4-C2.dgn Feb. 24, 2006

CADD FILE: server/5662/breesecodepvt34-4-C3.dgn June, 2007

CITY OF BREESE
MUNICIPAL STANDARD DETAILS

60294

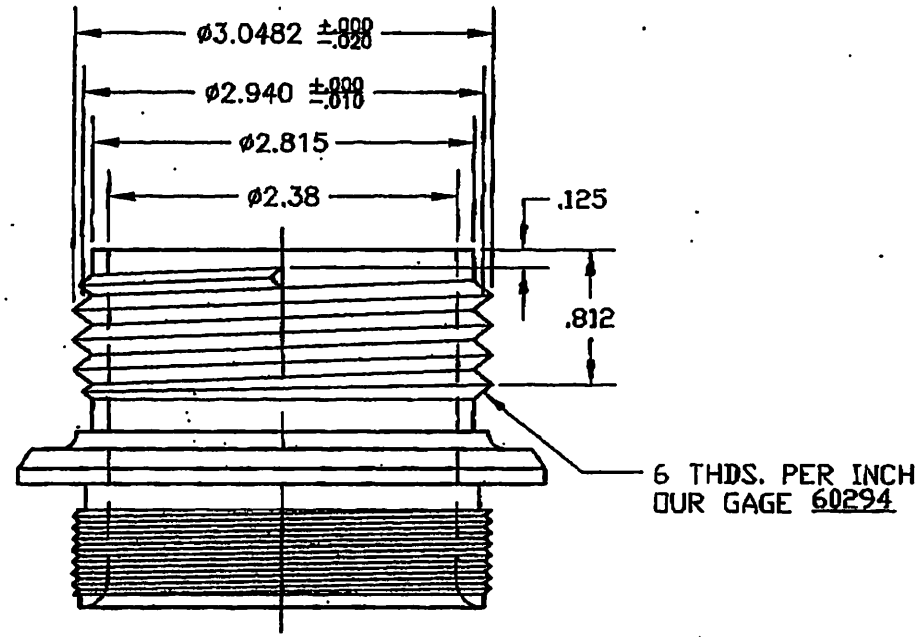

(MILLIMETER) INCH	TOLERANCES – MACHINING UNLESS OTHERWISE NOTED	THIRD ANGLE PROJECTION	
INITIAL RELEASE	BREAK EDGES MACH. .005/.016	FINISH SURFACES 125	PURCH. / FINISH
DRFT'R SMC 11-8-05			
CHK'R JMG 11-8-05	FRACTIONS ±1/64	DECIMALS 2 PL ±.025 3 PL ±.010	ANGLES ±1°
APP			REF. NO. / SCALE NONE
E.O. NUMBER			STK. NO.
Mueller Co.	NAT'L DESCR. HOSE THREAD GAGE	REVISION	NUMBER 60294 SHEET 1 OF 1

REV.	DESCRIPTION	REF.	DRFT'R	CHK'R	APP	DATE

FIGURE 34-4-C3

HENRY, MEISENHEIMER & GENDE, INC. 1075 LAKE RD., P.O. BOX 70, CARLYLE, ILLINOIS 62231 (618)-594-3711 WWW.HMGENGINEERS.COM
5662\breesecodepvt34-4-C3.dgn 6/28/2007 10:51:50 AM

CITY OF BREESE

MUNICIPAL STANDARD DETAILS

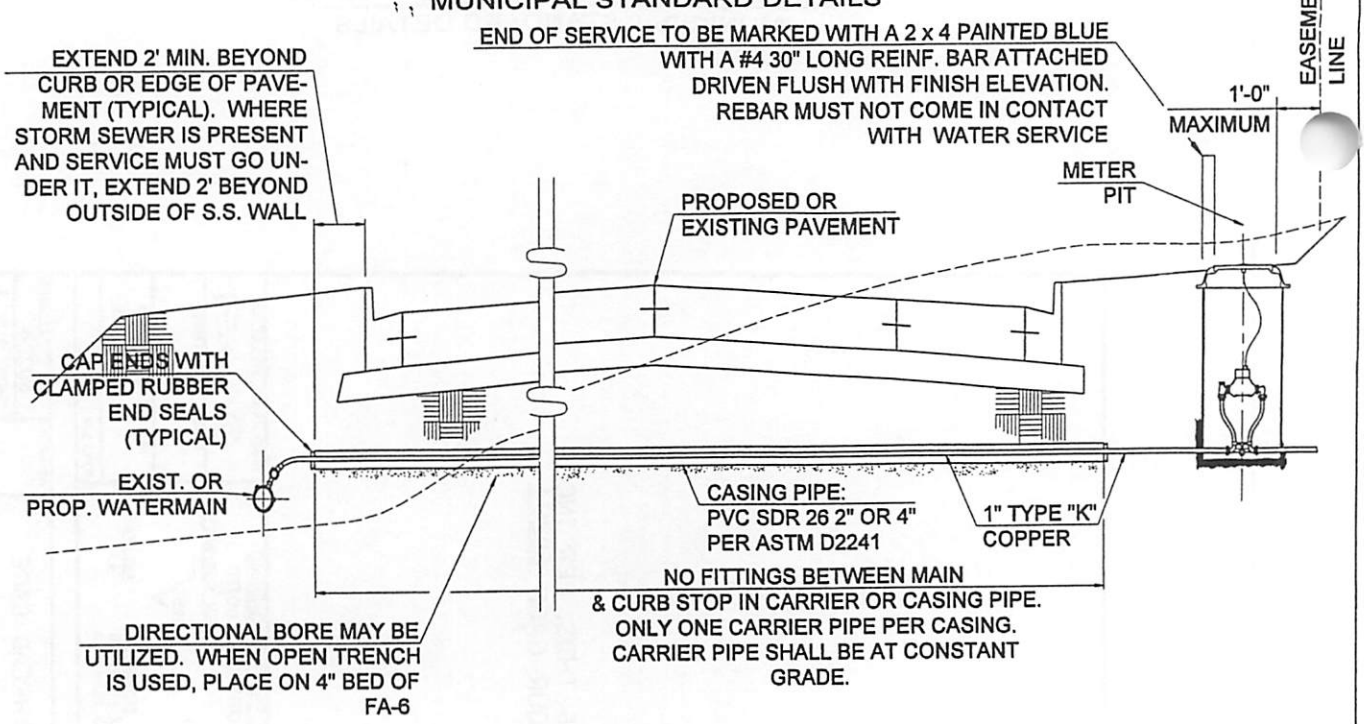

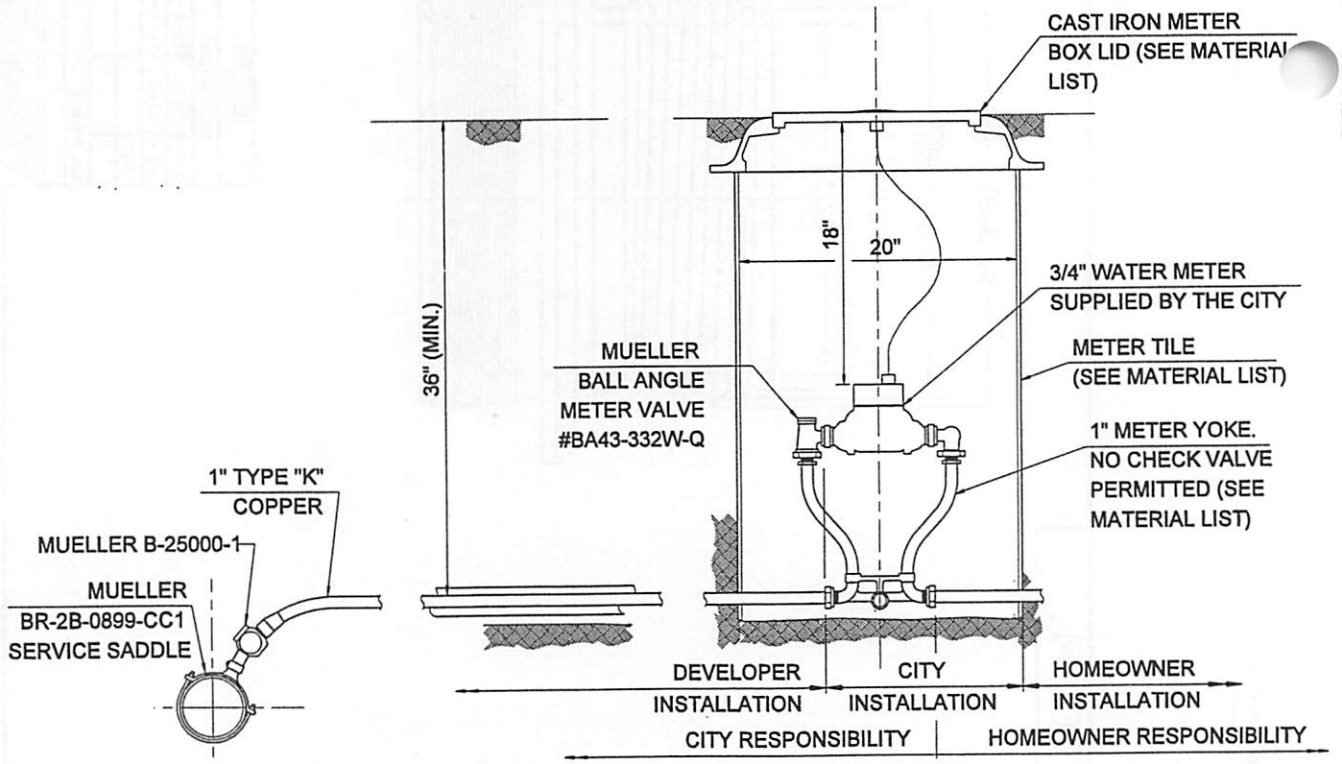

WATER SERV. INSTALLATION DETAILS

FIGURE 34-4-C4

CADD FILE: server/5662/breesecodepvt34-4-C2.dgn Feb. 24, 2006

CITY OF BREESE

MUNICIPAL STANDARD DETAILS

SURVEYOR'S CERTIFICATE

THIS IS TO CERTIFY THAT AT THE REQUEST OF ACME DEVELOPMENT, LLC, WE HAVE SURVEYED, SUBDIVIDED AND PLATTED THE FOLLOWING DESCRIBED PROPERTY, TO WIT:

BOUNDARY OF "ACME'S CREEK - FOURTH PLAT"
A TRACT OF LAND BEING A PORTION OF THE SOUTH HALF OF THE NORTHWEST QUARTER OF SECTION 30 IN TOWNSHIP 1 NORTH, RANGE 7 WEST OF THE THIRD PRINCIPAL...

SURVEYOR'S CERTIFICATE (CONTINUED)

WE ALSO CERTIFY THAT THE ATTACHED PLAT IS REPRESENTATION THEREOF. ALL NECESSARY SURVEY MONUMENTS HAVE BEEN INSTALLED AND ALL DIMENSIONS AND OTHER ESSENTIAL INFORMATION REQUIRED BY THE RESOLUTION REGULATING THE PLATTING OF LAND INTO SUBDIVISIONS ADOPTED BY THE CITY OF BREESE COUNCIL HAVE BEEN COMPLIED WITH. THE LAND IS WITHIN THE CORPORATE LIMITS OF THE CITY OF BREESE, ILLINOIS, AND IS NOT WITH IN ONE AND ONE HALF MILES OF ANY INCORPORATED CITY, TOWN OR VILLAGE WHICH HAS ADOPTED A CITY PLAN AND IS EXERCISING THE SPECIAL POWERS AUTHORIZED BY DIVISION 12 OF ARTICLE 11 OF THE ILLINOIS MUNICIPAL CODE, AS NOT OR HEREAFTER AMENDED, AND NOT INCLUDED IN ANY OTHER MUNICIPALITY. THIS TRACT OF LAND IS NOT LOCATED WITHIN A SPECIAL FLOOD HAZARD AREA AS IDENTIFIED BY THE FEDERAL EMERGENCY MANAGEMENT AGENCY. THIS PROFESSIONAL SERVICE CONFORMS TO THE CURRENT ILLINOIS MINIMUM STANDARDS FOR A BOUNDARY SURVEY.

ALPHA CONULTANTS, INC.
BREESE, ILLINOIS 62230
A-1 NO. 5344.3 FEBRUARY 11, 2007

BY: _____

BEN ALPHA, PLS NO. 0007
LICENSE EXPIRES NOVEMBER 30, 2008

OWNER'S CERTIFICATE

WE, ACME DEVELOPMENT, LLC, THE OWNER IN FEE OF THE TRACT OF LAND DESCRIBED IN THE SURVEYOR'S CERTIFICATE DO HEREBY CERTIFY THAT WE HAVE CAUSED THE SAID TRACT OF LAND TO BE SURVEYED, SUBDIVIDED IN THE MANNER SHOWN AND SAID SUBDIVISION IS TO BE HEREAFTER KNOWN AS "ACME'S CREEK-FOURTH PLAT". ALL STREET RIGHTS OF WAY SHOWN HEREON ARE HEREBY DEDICATED TO THE USE OF THE PUBLIC FOREVER. ALL EASEMENTS SHOWN SHALL BE SET ASIDE FOR THE INSTALLATION, MAINTENANCE AND RECONSTRUCTION OF THE PRIVATE AND/OR PUBLIC UTILITIES AND SERVICES WHICH INCLUDE, BUT NOT RESTRICTED TO WATER, SEWERAGE, STORM WATER, GAS, ELECTRICAL AND COMMUNICATION SERVICES INCLUDING THE RELEASE AND WAIVER OF THE RIGHT OF HOMESTEAD UNDER THE HOMESTEAD EXEMPTION LAWS OF THE STATE OF ILLINOIS. THIS SUBDIVISION PLATTED HEREON IS WITHIN BREESE SCHOOL DISTRICT NUMBER X.

IN WITNESS WHERE OF, HUNTER'S CREEK DEVELOPMENT, LLC, HAVE CAUSED THESE PRESENTS TO BE SIGNED BY THEIR OFFICERS AND THE CORPORATE SEAL AFFIXED THERE TO THIS_____ DAY OF _____ , 2007 A.D.

ACME DEVELOPMENT, LLC
#Z OLD ROUTE 50
BREESE, ILLINOIS 62230

ACME DEVELOPMENT, L.L.C.

_____
JOHN DOE, MANAGER

FINAL PLAT INFORMATION

FIGURE 34-5-A1

CADD FILE: server/5662/breesecodepvt34-5-A1.dgn

CITY OF BREESE

MUNICIPAL STANDARD DETAILS

NOTARY ACKNOWLEDGEMENT FOR ACME DEVELOPMENT, L.L.C.

STATE OF ILLINOIS)
)SS
COUNTY OF CLINTON)

I, THE UNDERSIGNED, A NOTARY PUBLIC IN AND FOR SAID COUNTY AND IN THE STATE AFORESAID, DO HEREBY CERTIFY THAT JOHN DOE PERSONALLY KNOWN TO ME TO BE THE MANAGER OF ACME DEVELOPMENT, L.L.C. WHOSE NAME IS SUBSCRIBED TO THE FOREGOING "OWNER'S CERTIFICATE" APPEARED BEFORE ME THIS DAY IN PERSON AND SIGNED AND DELIVERED SAID INSTRUMENT ON BEHALF OF ACME DEVELOPMENT, L.L.C. FOR THE USES AND THEREIN SET FORTH.

GIVEN UNDER MY HAND AND NOTARY SEAL THIS_____ DAY OF _____, 2007 A.D.

_____
NOTARY PUBLIC

MY COMMISSION EXPIRES: _____

CITY OF BREESE CERTIFICATE

I, THE UNDERSIGNED, MAYOR OF THE CITY OF BREESE, CLINTON COUNTY, ILLINOIS, DO HEREBY CERTIFY THAT THE PLAT OF "ACME'S CREEK-FOURTH PLAT" SHOWN HEREON WAS DULY PRESENTED TO THE CITY COUNCIL AND APPROVED AT A MEETING OF SAME HELD ON THE_____ DAY OF _____, 2007 A.D.

_____
MAYOR

_____
ATTEST: CITY CLERK

"911 ADDRESS CERTIFICATION"

ESTABLISHED AND APPROVED THIS_____ DAY OF _____, 2007.

_____
CLINTON COUNTY "911" COORDINATOR

COUNTY CLERK'S CERTIFICATE

STATE OF ILLINOIS)
)SS
COUNTY OF CLINTON)

I, THE UNDERSIGNED, COUNTY CLERK OF CLINTON COUNTY, ILLINOIS, DO HEREBY CERTIFY THAT I HAVE EXAMINED THE ABOVE PLAT AND THAT I HAVE SEARCHED THE RECORDS OF MY OFFICE TO ASCERTAIN WHETHER ALL REDEEMABLE TAX SALES OR UNPAID TAXES AGAINST ANY OF THE REAL ESTATE INCLUDED IN THIS PLAT HAVE BEEN PAID AS REQUIRED BY LAW AND I DO HEREBY CERTIFY THAT I FIND NO REDEEMABLE TAX SALES OR UNPAID FORFEITED TAXES AGAINST ANY OF THE REAL ESTATE INCLUDED IN THIS PLAT, AND I HEREBY APPROVE THE SAME FOR ASSESSMENT PURPOSES.

I HAVE HEREUNTO SET MY HAND AND SEAL THIS_____ DAY OF _____, 2007 A.D.

_____
COUNTY CLERK

_____
DEPUTY COUNTY CLERK

FINA PLAT INFORMATION

FIGURE 34-5-A2

CADD FILE: server/5662/breesecodepvt34-5-A2.dgn